KRONE

# ERSATZTEILE
# SPARE PARTS
# PIÈCES DETACHEES

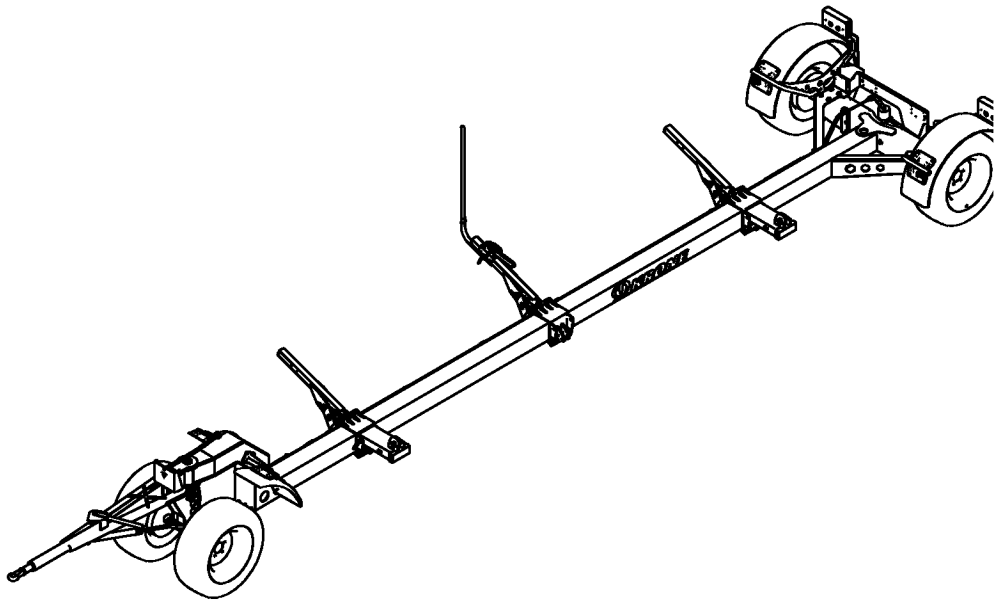

150 314 951 01

150 050 128 01 H - 06/10/2020

## Transportwagen - X-DISC 6200

ab Masch.-Nr.
from mach.-no.
á partir de mach.-no

**951 001 - 1 030 999**

# 150 050 128 01 H

# Erläuterungen
# Explanations
# Explications

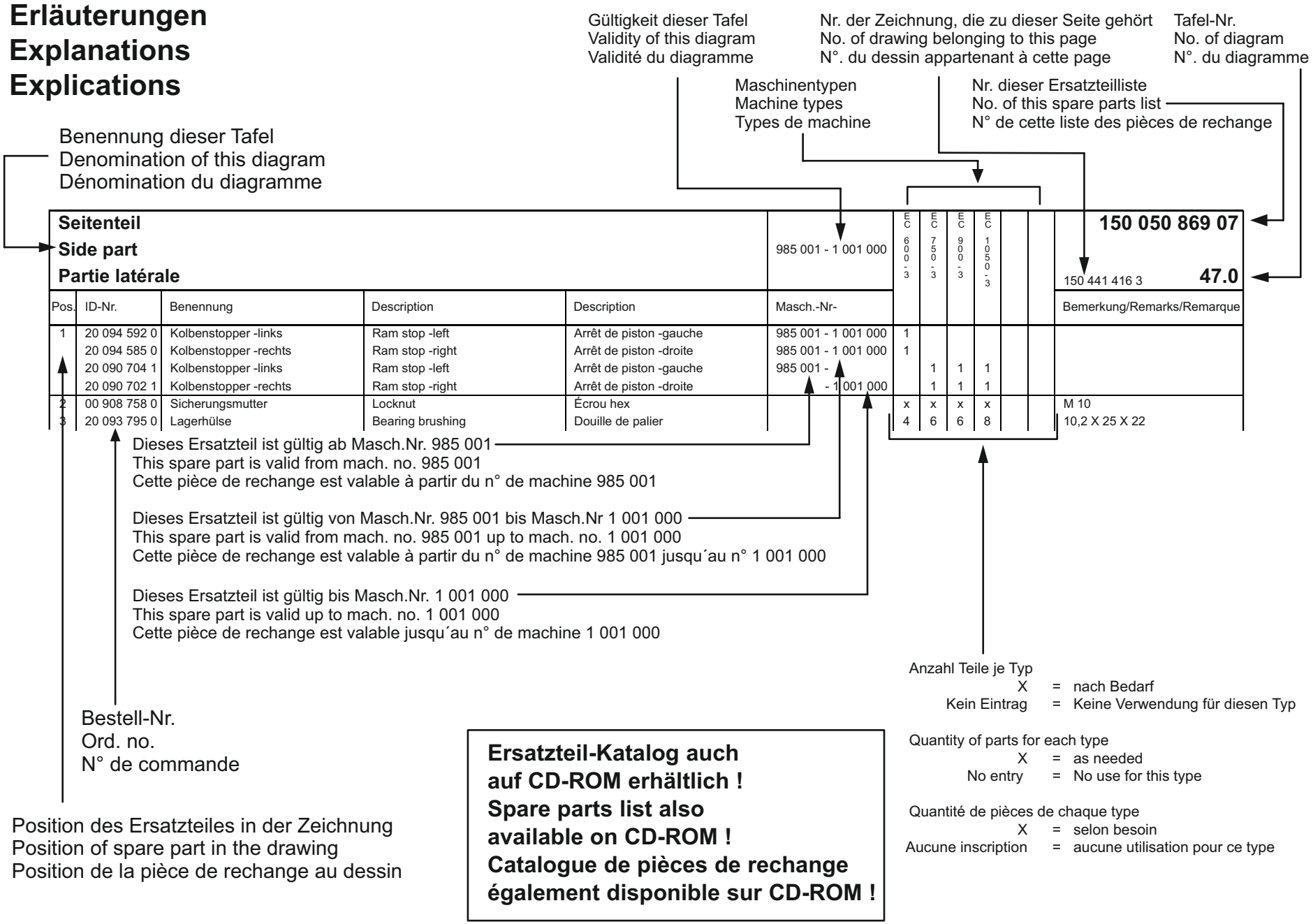


**Ersatzteil-Katalog auch auf CD-ROM erhältlich !**
**Spare parts list also available on CD-ROM !**
**Catalogue de pièces de rechange également disponible sur CD-ROM !**

| INHALTSVERZEICHNIS | TABLE OF CONTENTS | TABLE DES MATIERES | TAFEL<br>DIAGRAM<br>DIAGRAMME |
|---|---|---|---|
| Deichsel mit Auflaufbremse | Drawbar with overrun brake | Timon avec frein à inertie | 1.0 |
| Hauptrahmen | Main frame | Cadre principal | 2.0 |
| Bremsachse vorn | Brake axle front | Essieu freiné avant | 3.0 |
| Bremsachse kpl. | Brake axle cpl. | Essieu cpl. | 4.0 |
| Bereifung | Tyres | Pneumatiques | 5.0 |
| Kotflügel | Mudguard | Aile | 6.0 |
| Bremsanlage | Brake system | Système de freinage | 7.0 |
| Aufnahme | Retainer | Enregistrement | 8.0 |
| Unterfahrschutz | Underride guard | Protection anti-encastrement | 9.0 |
| Beleuchtung | Lighting | Éclairage | 10.0 |
| Beleuchtung | Lighting | Éclairage | 10.2 |
| Aufkleber | Label | Autocollant | 11.0 |
| Dokumentenbehälter | Document box | Boîte à documents | 12.0 |
| | | | |
| | | | |
| | | | |
| | | | |
| | | | |
| | | | |

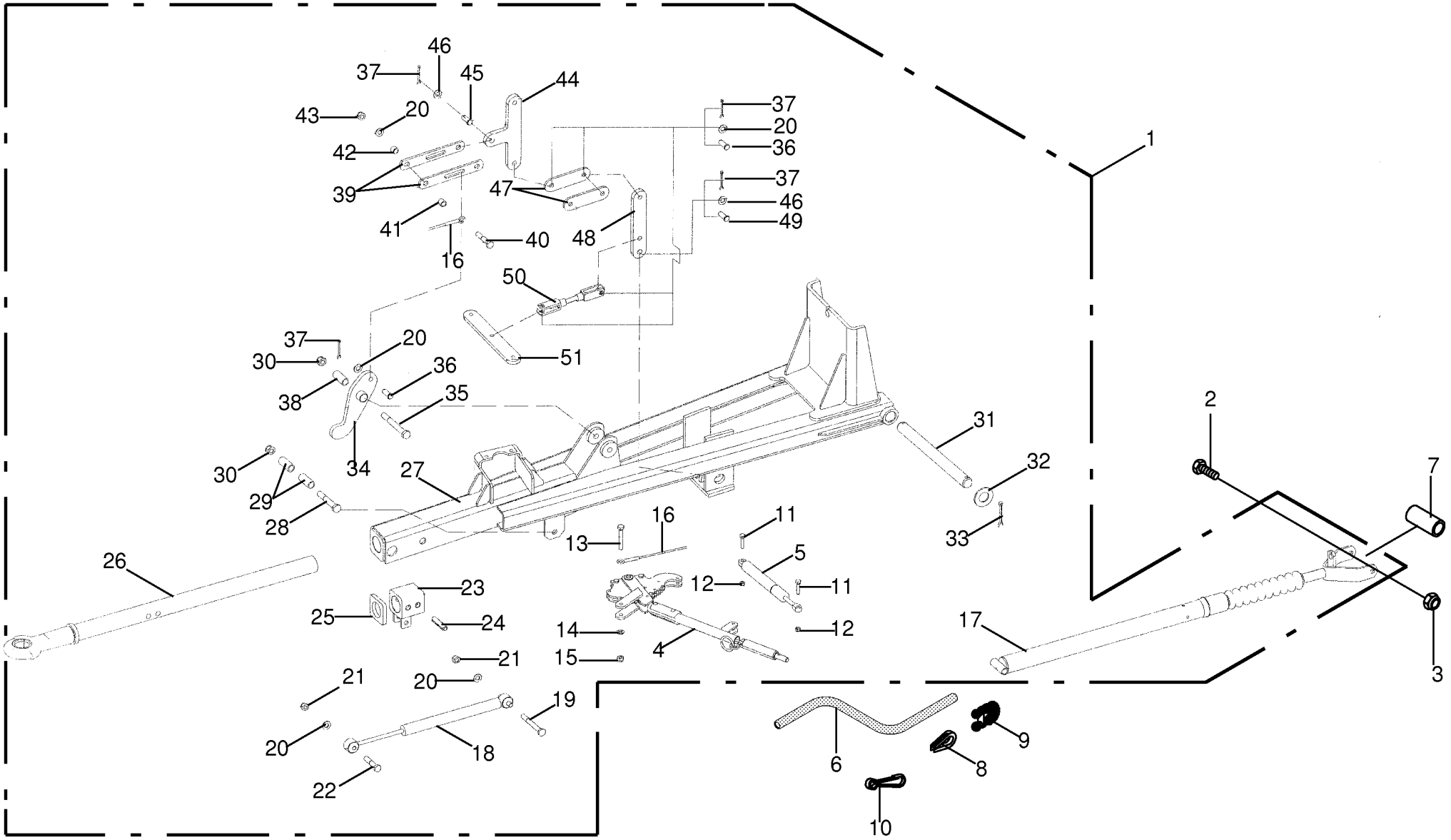


**150 050 128 01 / 1.0**

150 308 209 05

| **Deichsel mit Auflaufbremse -AM 2005 B12**<br>**Drawbar with overrun brake**<br>**Timon avec frein à inertie** | | | | | 951001 - 1030999 | X - DISC | | | | | | **150 050 128 01**<br>150 308 209 5 **1.0** |
|---|---|---|---|---|---|---|---|---|---|---|---|---|
| Pos. | ID-Nr. | Benennung | Description | Description | Masch.-Nr- | | | | | | | Bemerkung/Remarks/Remarque |
| 1 | 00 950 804 0 | Deichsel mit Auflaufbremse | Drawbar with overrun brake | Timon avec frein à inertie | | x | | | | | | |
| 2 | 00 901 097 1 | 6kt-Schraube | Hex head bolt | Boulon tête hex | | x | | | | | | M 12 X 160 |
| 3 | 00 908 701 0 | Sicherungsmutter | Locknut | Écrou hex | | x | | | | | | M 12 |
| 4 | 27 001 420 0 | Handbremshebel | Hand brake lever | Levier de frein | | x | | | | | | |
| 5 | 27 001 421 0 | Dämpfer | Dämpfer | Dämpfer | | x | | | | | | |
| 6 | 00 275 416 1 | Bedienungsseil | Control rope | Cordelette de manoeuvre | | x | | | | | | 6 X 1800 |
| 7 | 00 340 988 1 | Distanzrohr | Spacer tube | Tube d'entretoisement | | x | | | | | | 12,5 X 17,2 X 50 |
| 8 | 00 917 506 0 | Kausche | Grommet thimble | Cosse a corde | | x | | | | | | A 6 |
| 9 | 00 917 603 1 | Drahtseilklemme | Wire rope clamp | Pince de cable metallique | | x | | | | | | 6,5 |
| 10 | 00 917 901 1 | Karabinerhaken | Spring hook | Porte- mousqueton | | x | | | | | | C 60 |
| 11 | 00 901 042 1 | 6kt-Schraube | Hex head bolt | Boulon tête hex | | x | | | | | | M 8 X 35 |
| 12 | 00 908 706 0 | Sicherungsmutter | Locknut | Écrou hex | | x | | | | | | M 8 |
| 13 | 00 901 436 0 | 6kt-Schraube | Hex head bolt | Boulon tête hex | | x | | | | | | M 10 X 65 |
| 14 | 00 910 414 0 | Scheibe | Washer | Rondelle | | x | | | | | | 10,5 X 21 X 2 |
| 15 | 00 908 758 0 | Sicherungsmutter | Locknut | Écrou hex | | x | | | | | | M 10 |
| 16 | 27 001 417 0 | Handbremsseil | Hand brake rope | Câble du frein à main | | x | | | | | | Lg.= 300 |
| 17 | 27 001 422 0 | Klemmfix | Klemmfix | klemmfix | | x | | | | | | |
| 18 | 27 001 414 0 | Stossdämpfer | Shock absorber | Amortisseur | | x | | | | | | |
| 19 | 00 901 460 0 | 6kt-Schraube | Hex head bolt | Boulon tête hex | | x | | | | | | M 12 X 100 |
| 20 | 00 910 506 1 | Scheibe | Washer | Rondelle | | x | | | | | | 13 X 24 X 2,5 |
| 21 | 00 908 215 0 | 6kt-Mutter | Hex nut | Écrou hex | | x | | | | | | M 12 |
| 22 | 00 900 304 1 | 6kt-Schraube | Hex head bolt | Boulon tête hex | | x | | | | | | M 12 X 60 |
| 23 | 00 952 004 0 | Stellring | Collar | Bague d'arrêt | | x | | | | | | |
| 24 | 00 912 531 0 | Spannstift | Roll pin | Goupille de serrage | | x | | | | | | 14 X 65 |
| 25 | 00 952 005 0 | Dämpfer | Damper | Amortisseur | | x | | | | | | |
| 26 | 27 000 970 0 | Zugstange | Drawbar | Tringle | | x | | | | | | |
| 27 | 27 001 418 0 | Zuggabel | Trailer hitch | Forche de traction | | x | | | | | | |
| 28 | 00 901 115 0 | 6kt-Schraube | Hex head bolt | Boulon tête hex | | x | | | | | | M 14 X 150 |
| 29 | 27 001 419 0 | Buchse | Bushing | Douille | | x | | | | | | |
| 30 | 00 908 218 0 | 6kt-Mutter | Hex nut | Écrou hex | | x | | | | | | M 14 |
| 31 | 27 001 423 0 | Bolzen | Pin | Boulon | | x | | | | | | Rd. 30 X 388 |
| 32 | 00 910 515 2 | Scheibe | Washer | Rondelle | | x | | | | | | 31 X 56 X 4 |
| 33 | 00 912 132 0 | Splint | Cotter pin | Goupille fendue | | x | | | | | | 8 X 56 |
| 34 | 27 001 406 0 | Umlenkhebel | Bell crank | Levier de renvoi | | x | | | | | | |
| 35 | 00 901 112 1 | 6kt-Schraube | Hex head bolt | Boulon tête hex | | x | | | | | | M 14 X 120 |
| 36 | 00 916 025 0 | Bolzen mit kleinem Kopf | Pin with small head | Boulon avec petite tête | | x | | | | | | 12 X 20 |
| 37 | 00 912 066 0 | Splint | Cotter pin | Goupille fendue | | x | | | | | | 4 X 28 |
| 38 | 27 001 415 0 | Distanzrohr | Spacer tube | Tube d'entretoisement | | x | | | | | | |

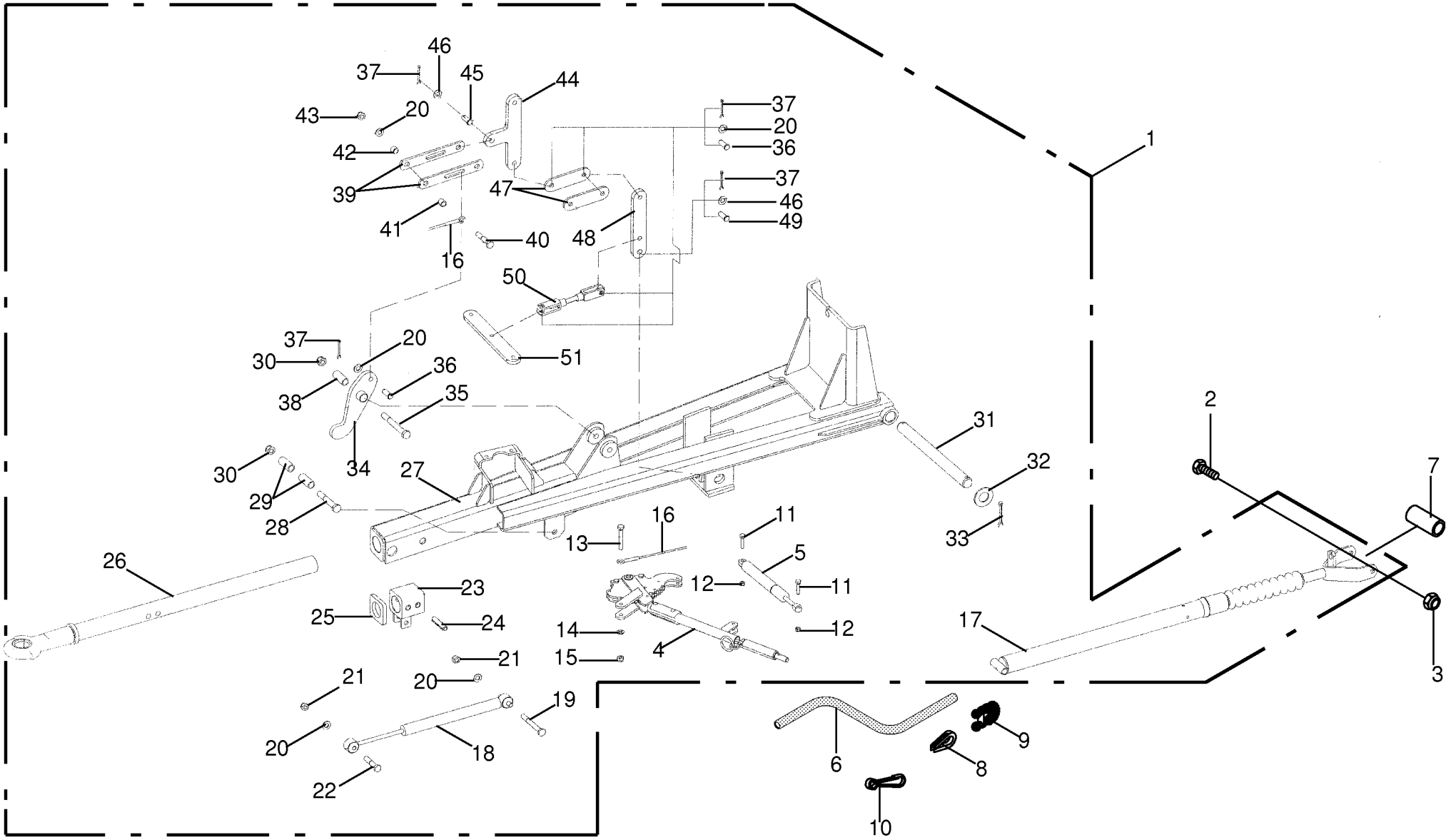


**150 050 128 01 / 1.0**

150 308 209 05

| **Deichsel mit Auflaufbremse -AM 2005 B12**<br>**Drawbar with overrun brake**<br>**Timon avec frein à inertie** | | | | | 951001 - 1030999 | X-DISC | | | | | | **150 050 128 01**<br>150 308 209 5 **1.0** |
|---|---|---|---|---|---|---|---|---|---|---|---|---|
| Pos. | ID-Nr. | Benennung | Description | Description | Masch.-Nr- | | | | | | | Bemerkung/Remarks/Remarque |
| 39 | 27 001 410 0 | Lasche | Strap | Patte | | x | | | | | | |
| 40 | 00 901 453 0 | 6kt-Schraube | Hex head bolt | Boulon tête hex | | x | | | | | | M 12 X 65 |
| 41 | 00 952 151 0 | Buchse | Bushing | Douille | | x | | | | | | 17,2 X 12,6 X 16 |
| 42 | 27 001 416 0 | Hülse | Bushing | Douille | | x | | | | | | 17,2 X 12,6 X 13 |
| 43 | 00 908 701 0 | Sicherungsmutter | Locknut | Écrou hex | | x | | | | | | M 12 |
| 44 | 27 001 411 0 | Hebel | Lever | Levier | | x | | | | | | |
| 45 | 00 916 009 0 | Bolzen mit kleinem Kopf | Pin with small head | Boulon avec petite tête | | x | | | | | | 14 X 50/45 |
| 46 | 00 953 606 0 | Scheibe | Washer | Rondelle | | x | | | | | | 15 X 25 X 1 |
| 47 | 27 001 412 0 | Lasche | Strap | Patte | | x | | | | | | |
| 48 | 27 001 413 0 | Hebel | Lever | Levier | | x | | | | | | |
| 49 | 00 916 034 0 | Bolzen | Pin | Boulon | | x | | | | | | Rd. 14 X 35 |
| 50 | 27 001 424 0 | Spannschloss | Turnbuckle | Tendeur à vis | | x | | | | | | |
| 51 | 27 001 425 0 | Hebel | Lever | Levier | | x | | | | | | |
| | | | | | | | | | | | | |
| | | | | | | | | | | | | |
| | | | | | | | | | | | | |
| | | | | | | | | | | | | |
| | | | | | | | | | | | | |
| | | | | | | | | | | | | |

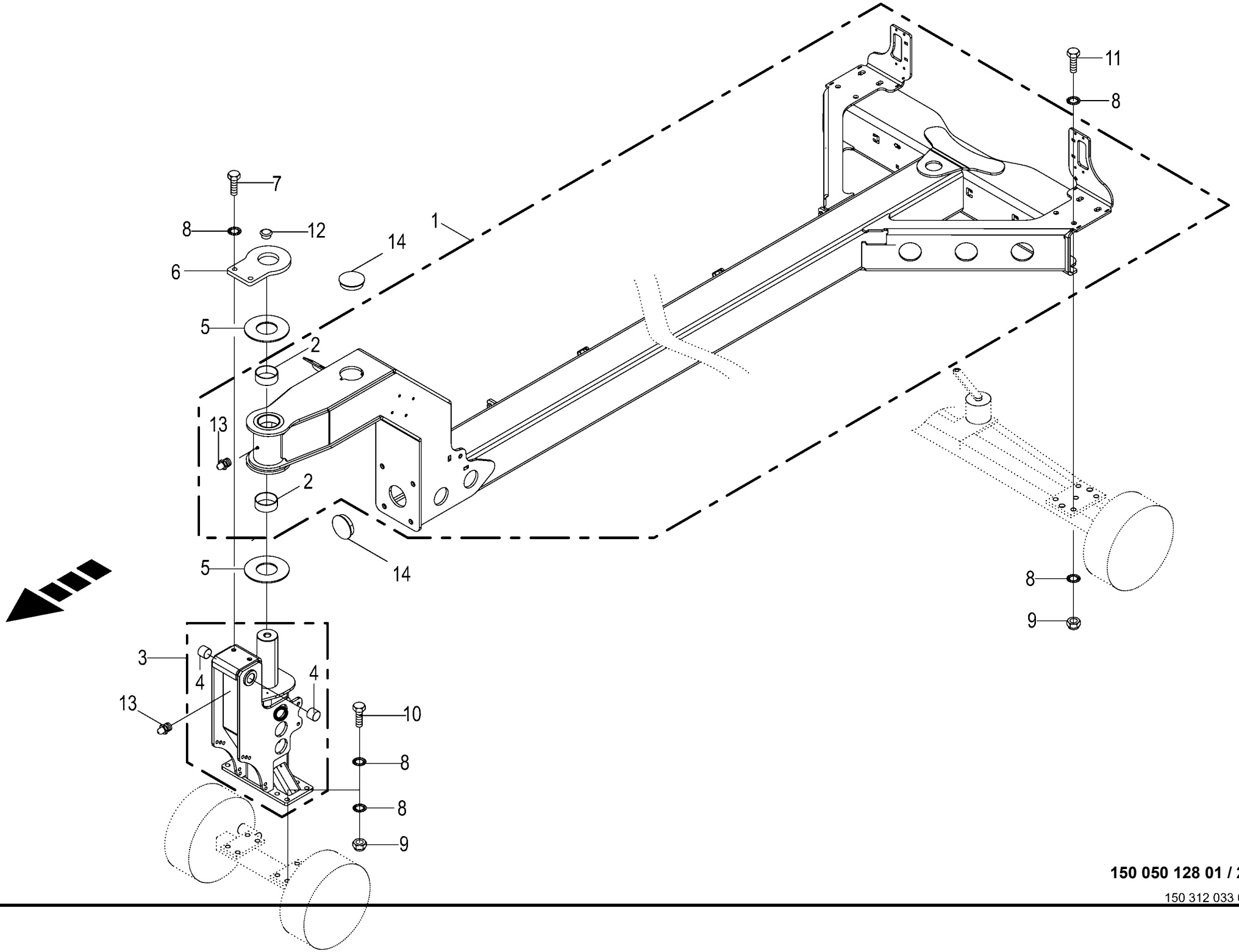


**150 050 128 01 / 2.0**

150 312 033 05

| **Hauptrahmen**<br>**Main frame**<br>**Cadre principal** | | | | | 951001 - 1030999 | X - DISC | | | | | | **150 050 128 01**<br>150 312 033 5 **2.0** |
|---|---|---|---|---|---|---|---|---|---|---|---|---|
| Pos. | ID-Nr. | Benennung | Description | Description | Masch.-Nr- | | | | | | | Bemerkung/Remarks/Remarque |
| 1 | 20 293 570 1 | Hauptrahmen m. Buchsen -kpl. | Main frame with sockets -cpl. | Cadre principal avec douilles -cpl. | | x | | | | | | |
| 2 | 00 935 338 0 | Lagerbuchse | Bearing bush | Coussinet | | x | | | | | | 75 X 80 X 30 |
| 3 | 00 353 284 0 | Achsbock -vorn | Axle support -front | Support d'essieu -devant | | x | | | | | | |
| 4 | 00 441 190 1 | Lagerbuchse | Bearing bush | Coussinet | | x | | | | | | 30 X 36 X 38 |
| 5 | 00 353 260 0 | Anlaufscheibe | Approach disc | Disque de démarrage | | x | | | | | | |
| 6 | 00 354 540 0 | Deckplatte | Cover plate | Plaque de recouvrement | | x | | | | | | |
| 7 | 00 900 675 0 | 6kt-Schraube | Hex head bolt | Boulon tête hex | | x | | | | | | M 16 X 40 |
| 8 | 00 909 912 1 | Sperrkantscheibe | Detent edged washer | Disque à bord d'arrêt | | x | | | | | | SKM 16 |
| 9 | 00 908 719 0 | Sicherungsmutter | Locknut | Écrou hex | | x | | | | | | M 16 |
| 10 | 00 900 677 0 | 6kt-Schraube | Hex head bolt | Boulon tête hex | | x | | | | | | M 16 X 50 |
| 11 | 00 901 482 0 | 6kt-Schraube | Hex head bolt | Boulon tête hex | | x | | | | | | M 16 X 60 |
| 12 | 00 953 823 0 | Verschlussstopfen | Sealing plug | Bouchon d'étanchéité | | x | | | | | | 20,7/25 X 8/10,5 |
| 13 | 00 919 105 0 | Kegelschmiernippel | Grease niple | Graisseur à cone | | x | | | | | | AM 8 X 1 |
| 14 | 27 013 491 0 | Verschl.-Stopfen 86/95x18 | Sealing plug GPN300F42 86/ 95x18/21 | Bouchon d'étanchéité 86/95x18 | | x | | | | | | |
| | | | | | | | | | | | | |
| | | | | | | | | | | | | |
| | | | | | | | | | | | | |
| | | | | | | | | | | | | |
| | | | | | | | | | | | | |
| | | | | | | | | | | | | |

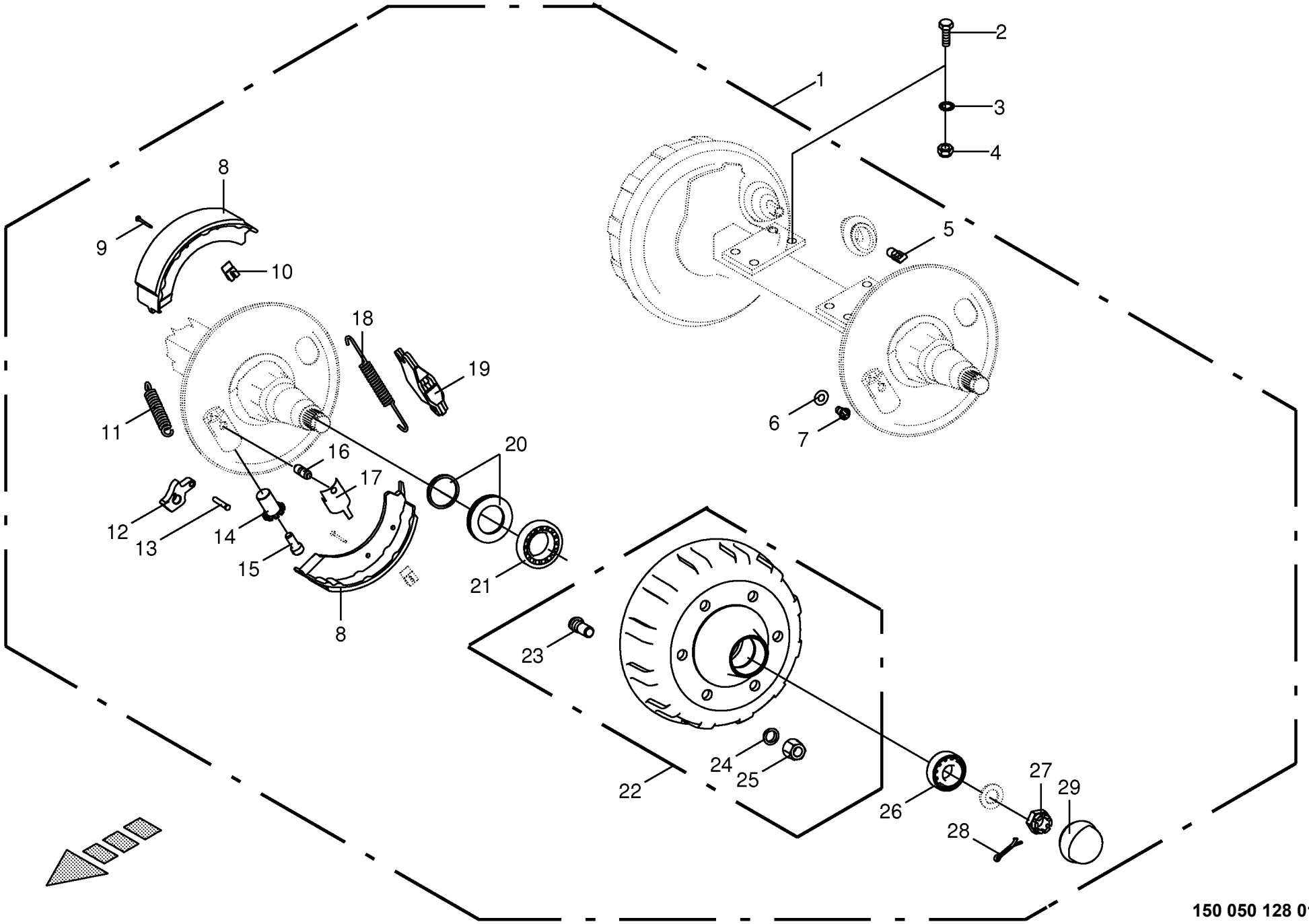


**150 050 128 01 / 3.0**

150 308 685 02

| **Bremsachse vorn**<br>**Brake axle front**<br>**Essieu freiné avant** | | | | | 951001 - 1030999 | X - DISC | | | | | | **150 050 128 01**<br>150 308 685 2 **3.0** |
|---|---|---|---|---|---|---|---|---|---|---|---|---|
| Pos. | ID-Nr. | Benennung | Description | Description | Masch.-Nr- | | | | | | | Bemerkung/Remarks/Remarque |
| 1 | 00 950 622 0 | Bremsachse -kpl. | Brake axle -cpl. | Essieu freiné -cpl. | | x | | | | | | 6/160/205 680 S3006-7 |
| 2 | 00 900 677 0 | 6kt-Schraube | Hex head bolt | Boulon tête hex | | x | | | | | | M 16 X 50 |
| 3 | 00 909 912 1 | Sperrkantscheibe | Detent edged washer | Disque à bord d'arrêt | | x | | | | | | SKM 16 |
| 4 | 00 908 719 0 | Sicherungsmutter | Locknut | Écrou hex | | x | | | | | | M 16 |
| 5 | 27 003 008 0 | Zugbügel | Tensile proving ring | Étier d'arrêt de traction | | x | | | | | | |
| 6 | 00 952 819 0 | Sicherung | Protection | Fusible | | x | | | | | | |
| 7 | 00 952 820 0 | Nachstellbolzen | Adjusting bolt | Boulon de reglage | | x | | | | | | |
| 8 | 00 952 816 0 | Bremsbacke -mit Belag | Brake shoe -with coating | Machoire de frein -avec revêtment | | 4 | | | | | | 300 X 60 |
| 9 | 00 952 824 0 | Spannstift | Roll pin | Goupille de serrage | | x | | | | | | |
| 10 | 00 952 827 0 | Spannfeder | Clambing spring | Plume de tension | | x | | | | | | |
| 11 | 00 952 830 0 | Zugfeder | Tension spring | Ressort de traction | | x | | | | | | 3,6 X 17 X 220 |
| 12 | 00 952 826 0 | Formteil | Formed part | Pièce forme | | x | | | | | | |
| 13 | 27 001 501 0 | Bolzen | Pin | Boulon | | x | | | | | | |
| 14 | 00 952 823 0 | Nachstellmutter | Adjusting nut | Ecrou de reglage | | x | | | | | | |
| 15 | 00 900 662 0 | 6kt-Schraube | Hex head bolt | Boulon tête hex | | x | | | | | | M 14 X 30 |
| 16 | 00 952 821 0 | Bolzen | Pin | Boulon | | x | | | | | | |
| 17 | 00 952 822 0 | Sicherungsklammer | Securing clip | Parenthèse de garantie | | x | | | | | | |
| 18 | 00 952 831 0 | Zugfeder | Tension spring | Ressort de traction | | x | | | | | | |
| 19 | 00 952 825 0 | Spreizschloß | Expander unit | Segment d`ecartement | | x | | | | | | |
| 20 | 00 952 333 1 | Stoss- und Dichtring | Sealing ring | Bague d'étanchéité | | x | | | | | | |
| 21 | 00 932 108 0 | Kegelrollenlager | Taper roller bearing | Roulement à rouleaux coniques | | x | | | | | | 30209 A |
| 22 | 27 003 015 0 | Bremstrommel -6 Loch | Brake drum -6 hole | Moyeu tambour -6 trou | | x | | | | | | 300 X 60 geteilt |
| 23 | 00 910 256 0 | Riffelbolzen | Wheel pin | Boulon de fix.de roue | | x | | | | | | M 18 X 1,5 X 46 |
| 24 | 00 910 215 0 | Federring | Spring washer | Rondelle elastique | | x | | | | | | C 18,5 |
| 25 | 00 952 421 0 | Radmutter | Nut | Ecrou de roue | | x | | | | | | B 18 X 1,5 |
| 26 | 00 932 105 0 | Kegelrollenlager | Taper roller bearing | Roulement à rouleaux coniques | | x | | | | | | 30206 A |
| 27 | 00 908 931 1 | Kronenmutter | Castellated nut | Ecrou crenele plat | | x | | | | | | M 27 X 1,5 |
| 28 | 00 912 091 1 | Splint | Cotter pin | Goupille fendue | | x | | | | | | 5 X 50 |
| 29 | 00 938 834 0 | Radkappe | Wheel cap | Chapeau de roue | | x | | | | | | Rd. 62 |
| | | | | | | | | | | | | |
| | | | | | | | | | | | | |

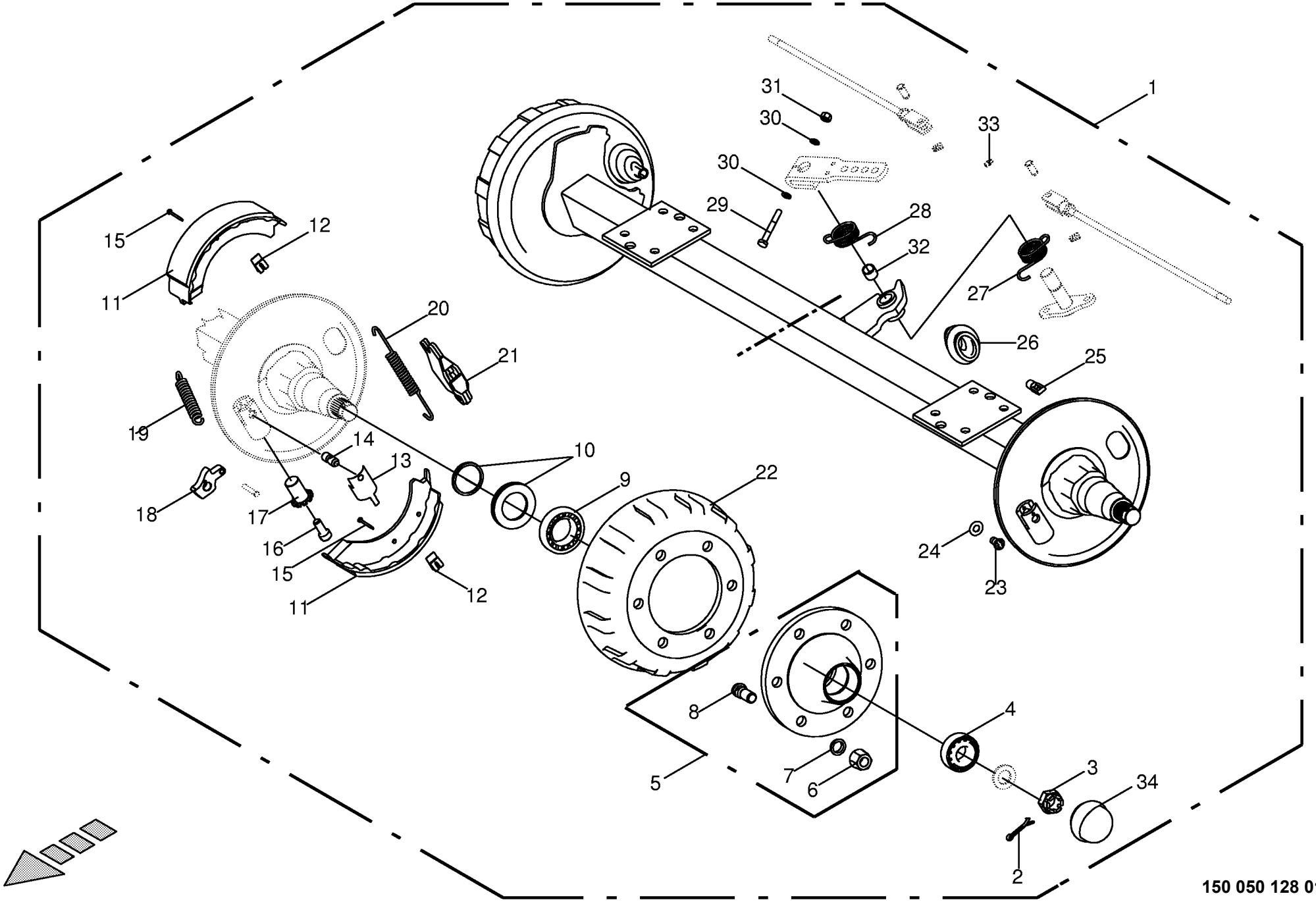


**150 050 128 01 / 4.0**

444 161 2

| **Bremsachse kpl. -hinten**<br>**Brake axle cpl.**<br>**Essieu cpl.** | | | | | 951001 - 1030999 | X - DISC | | | | | | **150 050 128 01**<br>444 161 2 **4.0** |
|---|---|---|---|---|---|---|---|---|---|---|---|---|
| Pos. | ID-Nr. | Benennung | Description | Description | Masch.-Nr- | | | | | | | Bemerkung/Remarks/Remarque |
| 1 | 00 950 284 1 | Bremsachse -kpl. | Brake axle -cpl. | Essieu freiné -cpl. | | x | | | | | | 6/160/205 1750 S3006-7 |
| 2 | 00 912 091 1 | Splint | Cotter pin | Goupille fendue | | x | | | | | | 5 X 50 |
| 3 | 00 908 831 1 | Kronenmutter | Castellated nut | Ecrou crenele plat | | x | | | | | | M 27 X 1,5 |
| 4 | 00 932 152 0 | Kegelrollenlager | Taper roller bearing | Roulement à rouleaux coniques | | x | | | | | | 32207 A |
| 5 | 00 952 610 0 | Radnabe -inkl. Radbolzen, Radmutter | Hub f. axle -incl. wheel pin, nut | Moyeu de roue -incl. boulon cyclable, ecrou de roue | | x | | | | | | 6/160/205 |
| 6 | 00 952 421 0 | Radmutter | Nut | Ecrou de roue | | x | | | | | | B 18 X 1,5 |
| 7 | 00 910 215 0 | Federring | Spring washer | Rondelle elastique | | x | | | | | | C 18,5 |
| 8 | 00 910 250 1 | Riffelbolzen | Wheel pin | Boulon de fix.de roue | | 12 | | | | | | M 18 X 1.5 X 57 |
| 9 | 00 932 180 0 | Kegelrollenlager | Taper roller bearing | Roulement à rouleaux coniques | | x | | | | | | 32013 X |
| 10 | 00 952 415 1 | Stoss- und Dichtring | Sealing ring | Bague d'étanchéité | | x | | | | | | |
| 11 | 00 952 816 0 | Bremsbacke -mit Belag | Brake shoe -with coating | Machoire de frein -avec revêtment | | x | | | | | | 300 X 60 |
| 12 | 00 952 827 0 | Spannfeder | Clambing spring | Plume de tension | | x | | | | | | |
| 13 | 00 952 822 0 | Sicherungsklammer | Securing clip | Parenthèse de garantie | | x | | | | | | |
| 14 | 00 952 821 0 | Bolzen | Pin | Boulon | | x | | | | | | |
| 15 | 00 952 824 0 | Spannstift | Roll pin | Goupille de serrage | | x | | | | | | |
| 16 | 00 952 828 0 | Schraube | Screw | Boulon | | x | | | | | | M 14 X 30 |
| 17 | 00 952 823 0 | Nachstellmutter | Adjusting nut | Ecrou de reglage | | x | | | | | | |
| 18 | 00 952 826 0 | Formteil | Formed part | Pièce forme | | x | | | | | | |
| 19 | 00 952 831 0 | Zugfeder | Tension spring | Ressort de traction | | x | | | | | | |
| 20 | 00 952 830 0 | Zugfeder | Tension spring | Ressort de traction | | x | | | | | | 3,6 X 17 X 220 |
| 21 | 00 952 825 0 | Spreizschloß | Expander unit | Segment d`ecartement | | x | | | | | | |
| 22 | 00 952 422 0 | Bremstrommel -6 Loch | Brake drum -6 hole | Moyeu tambour -6 trou | | x | | | | | | 300 x 60 |
| 23 | 00 952 820 0 | Nachstellbolzen | Adjusting bolt | Boulon de reglage | | x | | | | | | |
| 24 | 00 952 819 0 | Sicherung | Protection | Fusible | | x | | | | | | |
| 25 | 00 952 382 0 | Einhängeöse | Eyelet | Oeillet d`accrochage | | x | | | | | | |
| 26 | 00 952 829 0 | Faltenbalg | Bellows | Soufflet | | x | | | | | | |
| 27 | 00 956 696 0 | Drehfeder -rechts | Spring -right | Ressort -droite | | x | | | | | | |
| 28 | 00 956 695 0 | Drehfeder -links | Spring -left | Ressort -gauche | | x | | | | | | |
| 29 | 00 901 436 0 | 6kt-Schraube | Hex head bolt | Boulon tête hex | | x | | | | | | M 10 X 65 |
| 30 | 00 910 414 0 | Scheibe | Washer | Rondelle | | x | | | | | | 10,5 X 21 X 2 |
| 31 | 00 908 212 0 | 6kt-Mutter | Hex nut | Écrou hex | | x | | | | | | M 10 |
| 32 | 00 952 832 0 | Lagerbuchse | Bearing bush | Coussinet | | x | | | | | | Rd. 26,5 / 38 X 25 |
| 33 | 00 919 108 0 | Kegelschmiernippel | Grease niple | Graisseur à cone | | x | | | | | | AM 6 X 1 |
| 34 | 00 952 311 0 | Radkappe | Wheel cap | Chapeau de roue | | x | | | | | | Rd. 72,1 |
| | | | | | | | | | | | | |

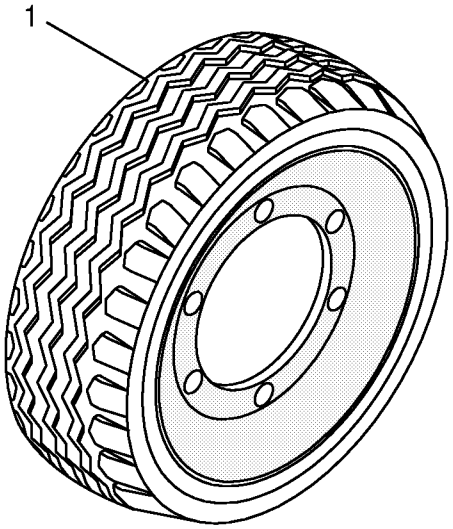
1

| **Bereifung**<br>**Tyres**<br>**Pneumatiques** | | | | | 951001 - 1030999 | X - DISC | | | | | | **150 050 128 01**<br>445 011 8 **5.0** |
|---|---|---|---|---|---|---|---|---|---|---|---|---|
| Pos. | ID-Nr. | Benennung | Description | Description | Masch.-Nr- | | | | | | | Bemerkung/Remarks/Remarque |
| 1 | 00 953 010 1 | Rad -kpl. | Wheel -cpl. | Roue -cpl. | | x | | | | | | 10.0/75-15.3 6/TL |
| | 00 953 118 0 | Felge -6 Loch | Rim -6 hole | Jante -6 trou | | x | | | | | | 9.00 X 15.3 |
| | 00 953 210 0 | Reifen | Tyre | Pneu | | x | | | | | | 10.0/75-15.3 IMPL 8 PLY |
| | 00 953 398 0 | Ventil -für schlauchlose Räder | Valve -for tubeless wheels | Soupape -pour des rovers sans chambre | | x | | | | | | Rd. 15,7 X 42,5 TR 415 |
| | | | | | | | | | | | | |
| | | | | | | | | | | | | |
| | | | | | | | | | | | | |
| | | | | | | | | | | | | |
| | | | | | | | | | | | | |
| | | | | | | | | | | | | |
| | | | | | | | | | | | | |
| | | | | | | | | | | | | |
| | | | | | | | | | | | | |

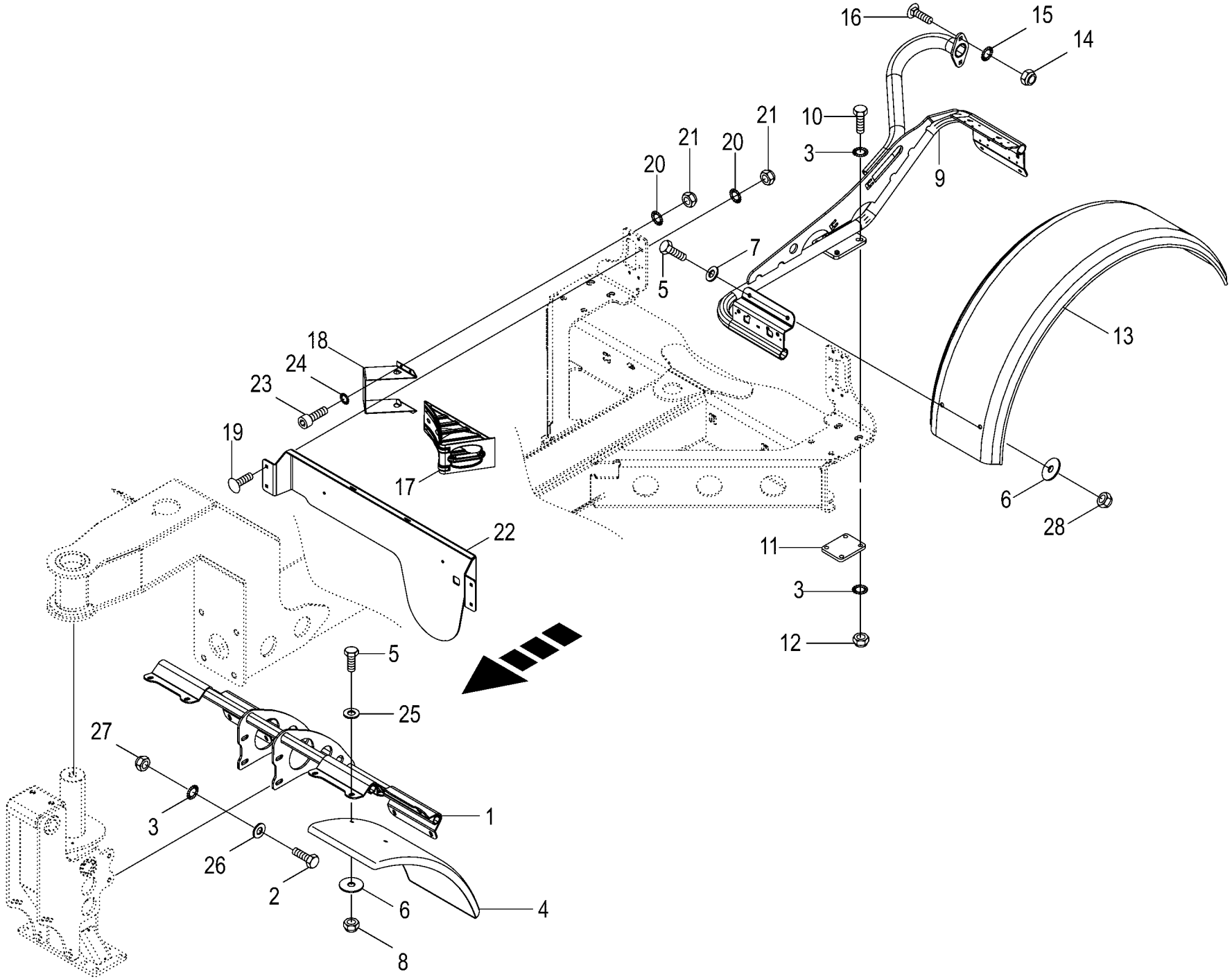


**150 050 128 01 / 6.0**

150 469 308 01

| **Kotflügel**<br>**Mudguard**<br>**Aile** | | | | | 951001 - 1030999 | X-DISC | | | | | | **150 050 128 01**<br>150 469 308 1 **6.0** |
|---|---|---|---|---|---|---|---|---|---|---|---|---|
| Pos. | ID-Nr. | Benennung | Description | Description | Masch.-Nr- | | | | | | | Bemerkung/Remarks/Remarque |
| 1 | 20 292 836 0 | Koteflügelhalter vorne -vorn | Mudguard support front -front | Support d'aile avant -devant | | x | | | | | | |
| 2 | 90 000 446 0 | 6kt-Schraube | Hex head bolt | Boulon tête hex | | x | | | | | | M 12 X 40 |
| 3 | 00 909 910 1 | Sperrkantscheibe | Detent edged washer | Disque à bord d'arrêt | | x | | | | | | SKM 12 |
| 4 | 00 233 573 0 | Kotflügel -kurz | Mudguard -short | Aile -court | | x | | | | | | |
| 5 | 00 900 637 0 | 6kt-Schraube | Hex head bolt | Boulon tête hex | | x | | | | | | M 10 X 30 |
| 6 | 00 910 639 1 | Scheibe | Washer | Rondelle | | x | | | | | | 11 X 48 X 5 |
| 7 | 00 910 414 0 | Scheibe | Washer | Rondelle | | x | | | | | | 10,5 X 21 X 2 |
| 8 | 90 001 230 0 | Sicherungsmutter | Locknut | Écrou hex | | x | | | | | | M 10 |
| 9 | 20 292 847 0 | Kotflügelhalter links | Fender support left | Support d'aile ga. | | x | | | | | | |
| | 20 292 848 0 | Koteflügelhalter rechts | Mudguard support right | Support d'aile dr. | | x | | | | | | |
| 10 | 90 001 712 0 | 6kt-Schraube | Hex head bolt | Boulon tête hex | | x | | | | | | M 12 X 130 |
| 11 | 00 353 236 0 | Anschraubplatte | Mounting plate | Plaque à visser | | x | | | | | | |
| 12 | 00 908 701 0 | Sicherungsmutter | Locknut | Écrou hex | | x | | | | | | M 12 |
| 13 | 00 233 572 0 | Kotflügel -hinten | Mudguard -back | Aile -derrière | | x | | | | | | |
| 14 | 00 908 758 0 | Sicherungsmutter | Locknut | Écrou hex | | x | | | | | | M 10 |
| 15 | 00 909 909 1 | Sperrkantscheibe | Detent edged washer | Disque à bord d'arrêt | | x | | | | | | SKM 10 |
| 16 | 00 904 850 1 | Flachrundschraube | Coach bolt | Vis a tête bombée | | x | | | | | | M 10 X 25 |
| 17 | 00 940 006 0 | Vorlegekeil | Wheel chock | Cale de freinage | | x | | | | | | |
| 18 | 00 940 007 0 | Tasche für Vorlegekeil | Bracket for wedge | Support de cale | | x | | | | | | |
| 19 | 00 904 732 2 | Flachrundschraube | Coach bolt | Vis a tête bombée | | x | | | | | | M 8 X 25 |
| 20 | 00 909 908 1 | Sperrkantscheibe | Detent edged washer | Disque à bord d'arrêt | | x | | | | | | SKM 8 |
| 21 | 00 908 706 0 | Sicherungsmutter | Locknut | Écrou hex | | x | | | | | | M 8 |
| 22 | 20 291 806 0 | Nummernschildblech "schmal" | Number plate sheet small | Tôle de plaque de signal. « étroite » | | x | | | | | | |
| 23 | 00 903 077 1 | Zylinderschraube | Allen screw | Vis tête cylindrique | | x | | | | | | M 8 X 25 |
| 24 | 00 909 903 0 | Sperrkantscheibe | Detent edged washer | Disque à bord d'arrêt | | x | | | | | | SKZ 8 |
| 25 | 90 000 121 0 | Scheibe | Washer | Rondelle | | x | | | | | | 10,5 X 30 X 2,5 |
| 26 | 00 910 320 0 | Scheibe | Washer | Rondelle | | x | | | | | | 13 X 30 X 6 |
| 27 | 00 908 701 0 | Sicherungsmutter | Locknut | Écrou hex | | x | | | | | | M 12 |
| | | | | | | | | | | | | |
| | | | | | | | | | | | | |

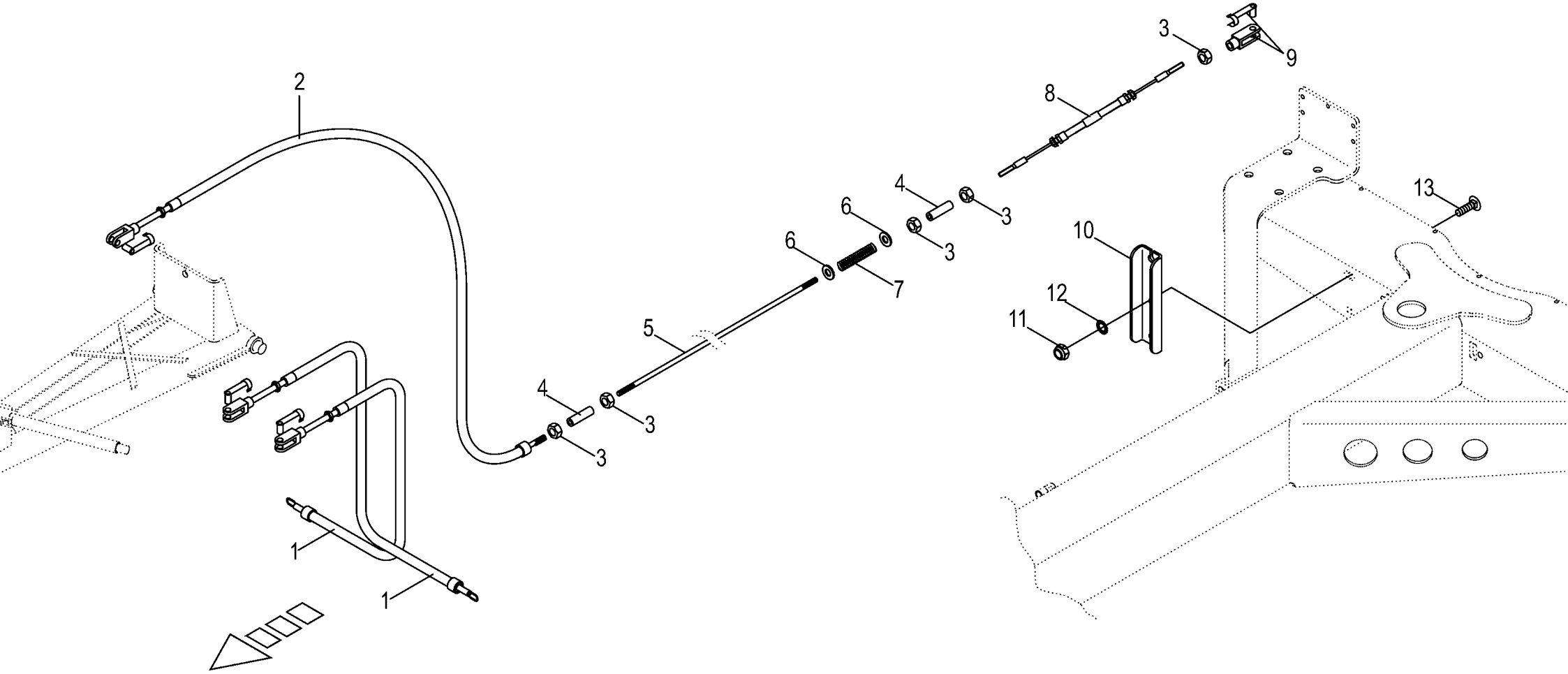


**150 050 128 01 / 7.0**

150 312 019 02

| **Bremsanlage**<br>**Brake system**<br>**Système de freinage** | | | | | 951001 - 1030999 | X - DISC | | | | | | **150 050 128 01**<br>150 312 019 2 **7.0** |
|---|---|---|---|---|---|---|---|---|---|---|---|---|
| Pos. | ID-Nr. | Benennung | Description | Description | Masch.-Nr- | | | | | | | Bemerkung/Remarks/Remarque |
| 1 | 00 952 898 1 | Bowdenzug -kpl. | Bowden cable -cpl. | Câble de Bowden -cpl. | | x | | | | | | Lg.= 835/1122 |
| 2 | 00 953 941 0 | Bremsseilzug -kpl. | Brake linkage -cpl. | Traction par chaîne de freinage -cpl. | | x | | | | | | Lg.= 1950/2600 |
| 3 | 00 908 215 0 | 6kt-Mutter | Hex nut | Écrou hex | | x | | | | | | M 12 |
| 4 | 00 353 257 0 | Gewinderohr | Threaded pipe | Tube filetage | | x | | | | | | M 12 |
| 5 | 00 354 560 0 | Bremsstange | Brake rod | Tige de commande de frein | | x | | | | | | Lg.= 5500 |
| 6 | 00 910 506 1 | Scheibe | Washer | Rondelle | | x | | | | | | 13 X 24 X 2,5 |
| 7 | 00 015 145 1 | Druckfeder | Pressure spring | Ressort de pression | | x | | | | | | 2 X 15 X 70 |
| 8 | 27 015 591 0 | Bremsseilzug 1010mm -kpl. | Brake cable pull 1010 mm -cpl. | Câble de frein 1010 mm -cpl. | | x | | | | | | |
| 9 | 00 927 101 1 | Gabelkopf kpl. | Clevis cpl. | Chape cpl. | | x | | | | | | G 12 X 48 |
| 10 | 00 354 523 0 | U-Blech | U-plate | U-tôle | | x | | | | | | |
| 11 | 00 908 701 0 | Sicherungsmutter | Locknut | Écrou hex | | x | | | | | | M 12 |
| 12 | 00 909 910 1 | Sperrkantscheibe | Detent edged washer | Disque à bord d'arrêt | | x | | | | | | SKM 12 |
| 13 | 00 904 983 1 | Flachrundschraube | Coach bolt | Vis a tête bombée | | x | | | | | | M 12 X 30 |
| | | | | | | | | | | | | |
| | | | | | | | | | | | | |
| | | | | | | | | | | | | |
| | | | | | | | | | | | | |
| | | | | | | | | | | | | |
| | | | | | | | | | | | | |

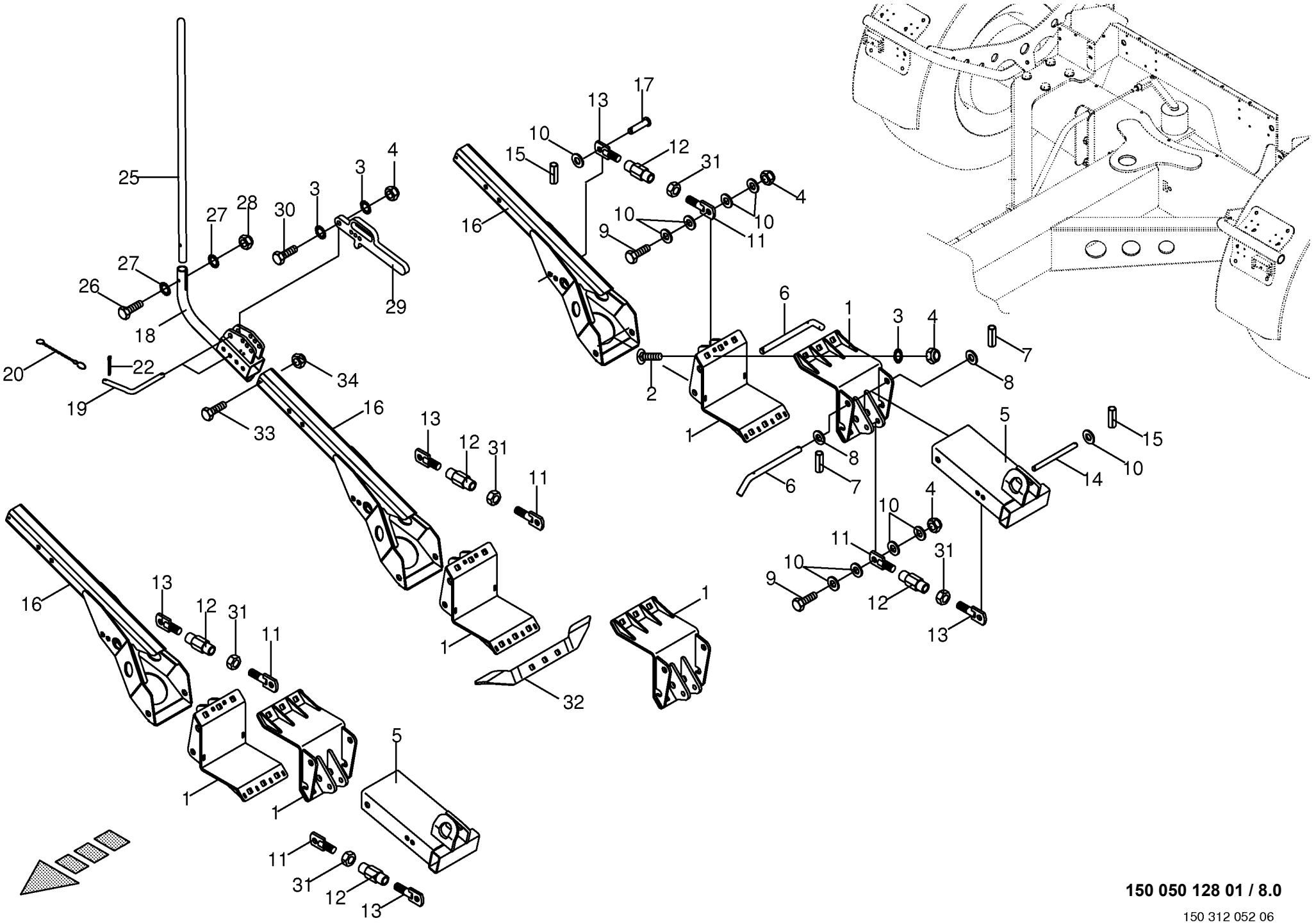


**150 050 128 01 / 8.0**

150 312 052 06

| **Aufnahme**<br>**Retainer**<br>**Enregistrement** | | | | | 951001 - 1030999 | X - DISC | | | | | | **150 050 128 01**<br>150 312 052 6 **8.0** |
|---|---|---|---|---|---|---|---|---|---|---|---|---|
| Pos. | ID-Nr. | Benennung | Description | Description | Masch.-Nr- | | | | | | | Bemerkung/Remarks/Remarque |
| 1 | 00 354 505 0 | Schale | Shell | Coquille | | x | | | | | | |
| 2 | 00 904 723 0 | Flachrundschraube | Coach bolt | Vis a tête bombée | | x | | | | | | M 16 X 50 |
| 3 | 00 909 912 1 | Sperrkantscheibe | Detent edged washer | Disque à bord d'arrêt | | x | | | | | | SKM 16 |
| 4 | 00 908 719 0 | Sicherungsmutter | Locknut | Écrou hex | | x | | | | | | M 16 |
| 5 | 00 354 527 0 | Kufe | Skid | Patin | | x | | | | | | |
| 6 | 00 354 562 0 | Bolzen | Pin | Boulon | | x | | | | | | Rd. 20 X 310 |
| 7 | 00 912 644 2 | Spannstift | Roll pin | Goupille de serrage | | x | | | | | | 6 X 40 |
| 8 | 00 910 512 2 | Scheibe | Washer | Rondelle | | x | | | | | | 21 X 37 X 3 |
| 9 | 00 901 140 2 | 6kt-Schraube | Hex head bolt | Boulon tête hex | | x | | | | | | M 16 X 90 -10.9 |
| 10 | 00 910 303 1 | Scheibe | Washer | Rondelle | | x | | | | | | 17 X 30 X 3 |
| 11 | 20 091 129 0 | Gewindestange -links | Threaded rod -left | Tige filetée -gauche | | x | | | | | | M 20 |
| 12 | 00 146 983 1 | Spannschlossmutter | Spanner nut | Ecrou barillet | | x | | | | | | M 20 |
| 13 | 20 091 130 0 | Gewindestange -rechts | Threaded rod -right | Tige filetée -droite | | x | | | | | | M 20 |
| 14 | 00 287 855 0 | Bolzen | Pin | Boulon | | x | | | | | | Rd. 16 X 204 |
| 15 | 00 912 584 2 | Spannstift | Roll pin | Goupille de serrage | | x | | | | | | 4 X 30 |
| 16 | 00 354 535 1 | Kufe | Skid | Patin | | x | | | | | | |
| 17 | 00 916 019 0 | Bolzen | Pin | Boulon | | x | | | | | | Rd. 16 X 85 |
| 18 | 00 354 542 0 | Mitteneinweiser | Centre pointer | Indiquer centre | | x | | | | | | |
| 19 | 00 015 213 5 | Steckbolzen | Locking pin | Axe débrochable | | x | | | | | | Rd. 12 X 94 |
| 20 | 00 922 651 2 | Knotenkette | Chain | Chaine | | x | | | | | | Lg.= 215 |
| 21 | 00 917 103 0 | Federstecker | Spring clip | Goupille elastique | | x | | | | | | 3,2 |
| 25 | 00 354 559 0 | Peilstab | Dip stick | Pige | | x | | | | | | Rd. 25 X 1000 |
| 26 | 00 901 423 0 | 6kt-Schraube | Hex head bolt | Boulon tête hex | | x | | | | | | M 8 X 50 |
| 27 | 00 909 908 1 | Sperrkantscheibe | Detent edged washer | Disque à bord d'arrêt | | x | | | | | | SKM 8 |
| 28 | 00 908 706 0 | Sicherungsmutter | Locknut | Écrou hex | | x | | | | | | M 8 |
| 29 | 00 354 548 0 | Hebel -mitte | Lever -middle | Levier -centre | | x | | | | | | |
| 30 | 90 003 896 0 | 6kt-Schraube M16 x 75 | Hexagon head screw M16 x 75 | Vis six pans M16 x 75 | | x | | | | | | |
| 31 | 00 908 225 0 | 6kt-Mutter | Hex nut | Écrou hex | | x | | | | | | M 20 |
| 32 | 20 091 135 0 | Strassenblech | Road plate | Tôle routière | | x | | | | | | |
| 33 | 00 901 004 0 | 6kt-Schraube | Hex head bolt | Boulon tête hex | | x | | | | | | M 6 X 70 |
| 34 | 00 908 704 1 | Sicherungsmutter | Locknut | Écrou hex | | x | | | | | | M 6 |
| | | | | | | | | | | | | |
| | | | | | | | | | | | | |

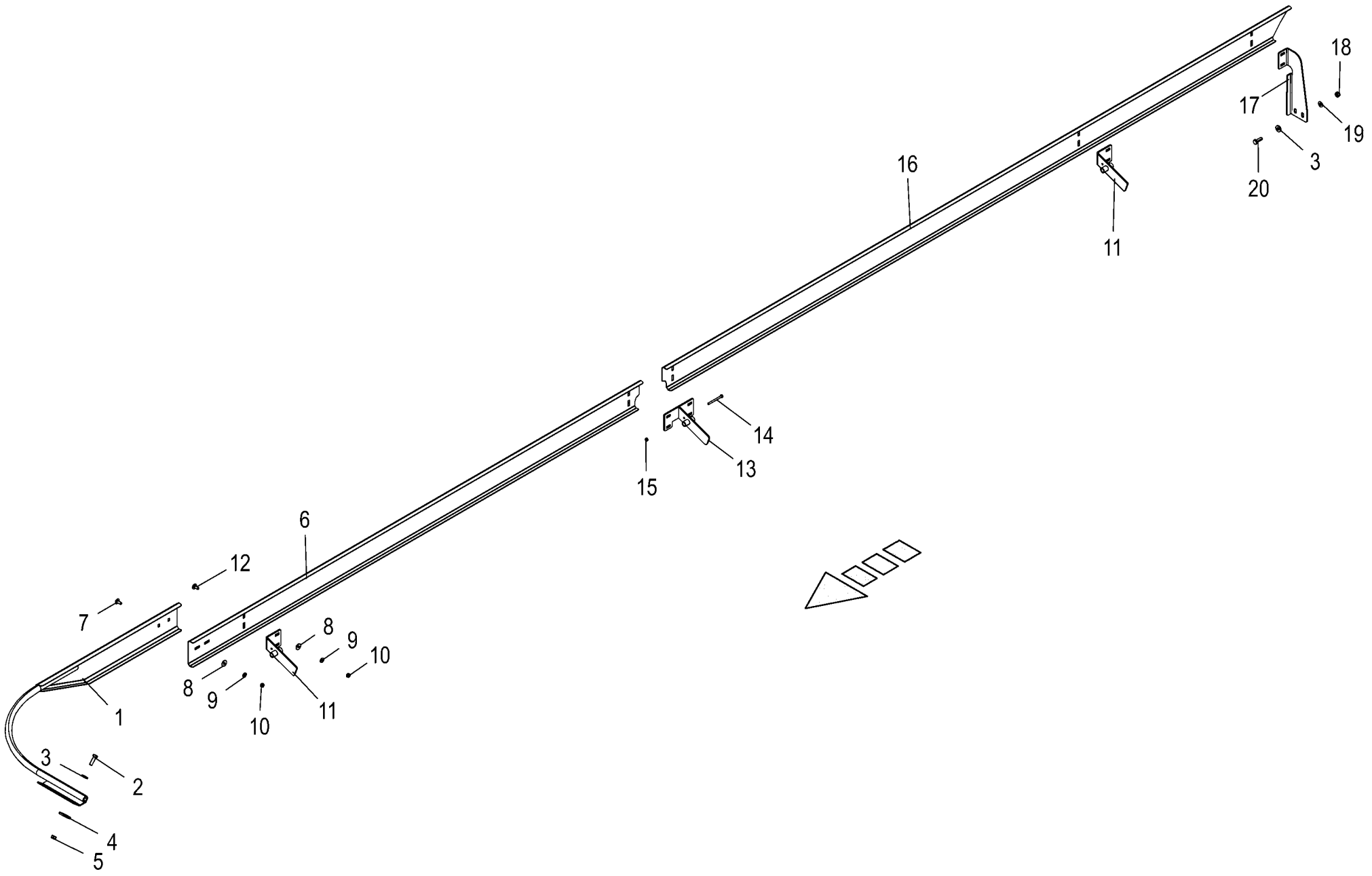


**150 050 128 01 / 9.0**

150 441 424 01

## Unterfahrschutz
## Underride guard
## Protection anti-encastrement

951001 - 1030999

X-DISC

**150 050 128 01**

150 441 424 1 **9.0**

| Pos. | ID-Nr. | Benennung | Description | Description | Masch.-Nr- | | | | | | | Bemerkung/Remarks/Remarque |
|---|---|---|---|---|---|---|---|---|---|---|---|---|
| 1 | 20 097 995 0 | Anfahrschutz vorne | Collision guard front | Protection de démarrage avant | | x | | | | | | |
| 2 | 00 900 638 0 | 6kt-Schraube | Hex head bolt | Boulon tête hex | | x | | | | | | M 10 X 35 |
| 3 | 00 910 361 1 | Scheibe | Washer | Rondelle | | x | | | | | | 10,5 X 25 X 4 |
| 4 | 00 910 639 1 | Scheibe | Washer | Rondelle | | x | | | | | | 11 X 48 X 5 |
| 5 | 90 001 230 0 | Sicherungsmutter | Locknut | Écrou hex | | x | | | | | | M 10 |
| 6 | 20 098 012 0 | Anfahrblech vorne | Collision sheet front | Tôle de démarrage avant | | x | | | | | | |
| 7 | 00 904 951 2 | Flachrundschraube | Coach bolt | Vis a tête bombée | | x | | | | | | M 8 X 20 |
| 8 | 00 910 603 0 | Scheibe | Washer | Rondelle | | x | | | | | | 8,4 X 24 X 2 |
| 9 | 00 909 908 1 | Sperrkantscheibe | Detent edged washer | Disque à bord d'arrêt | | x | | | | | | SKM 8 |
| 10 | 00 908 706 0 | Sicherungsmutter | Locknut | Écrou hex | | x | | | | | | M 8 |
| 11 | 20 097 982 0 | Halter außen | Support outside | Support extérieur | | x | | | | | | |
| 12 | 00 904 731 2 | Flachrundschraube | Coach bolt | Vis a tête bombée | | x | | | | | | M 8 X 20 |
| 13 | 20 098 020 0 | Halter | Support | Support | | x | | | | | | |
| 14 | 00 901 004 0 | 6kt-Schraube | Hex head bolt | Boulon tête hex | | x | | | | | | M 6 X 70 |
| 15 | 00 908 704 1 | Sicherungsmutter | Locknut | Écrou hex | | x | | | | | | M 6 |
| 16 | 20 098 016 0 | Anfahrblech hinten | Collision sheet rear | Tôle de démarrage arrière | | x | | | | | | |
| 17 | 20 098 006 0 | Haltestrebe | Retaining strut | Potence de maintien | | x | | | | | | |
| 18 | 00 908 758 0 | Sicherungsmutter | Locknut | Écrou hex | | x | | | | | | M 10 |
| 19 | 00 909 909 1 | Sperrkantscheibe | Detent edged washer | Disque à bord d'arrêt | | x | | | | | | SKM 10 |
| 20 | 00 900 637 0 | 6kt-Schraube | Hex head bolt | Boulon tête hex | | x | | | | | | M 10 X 30 |

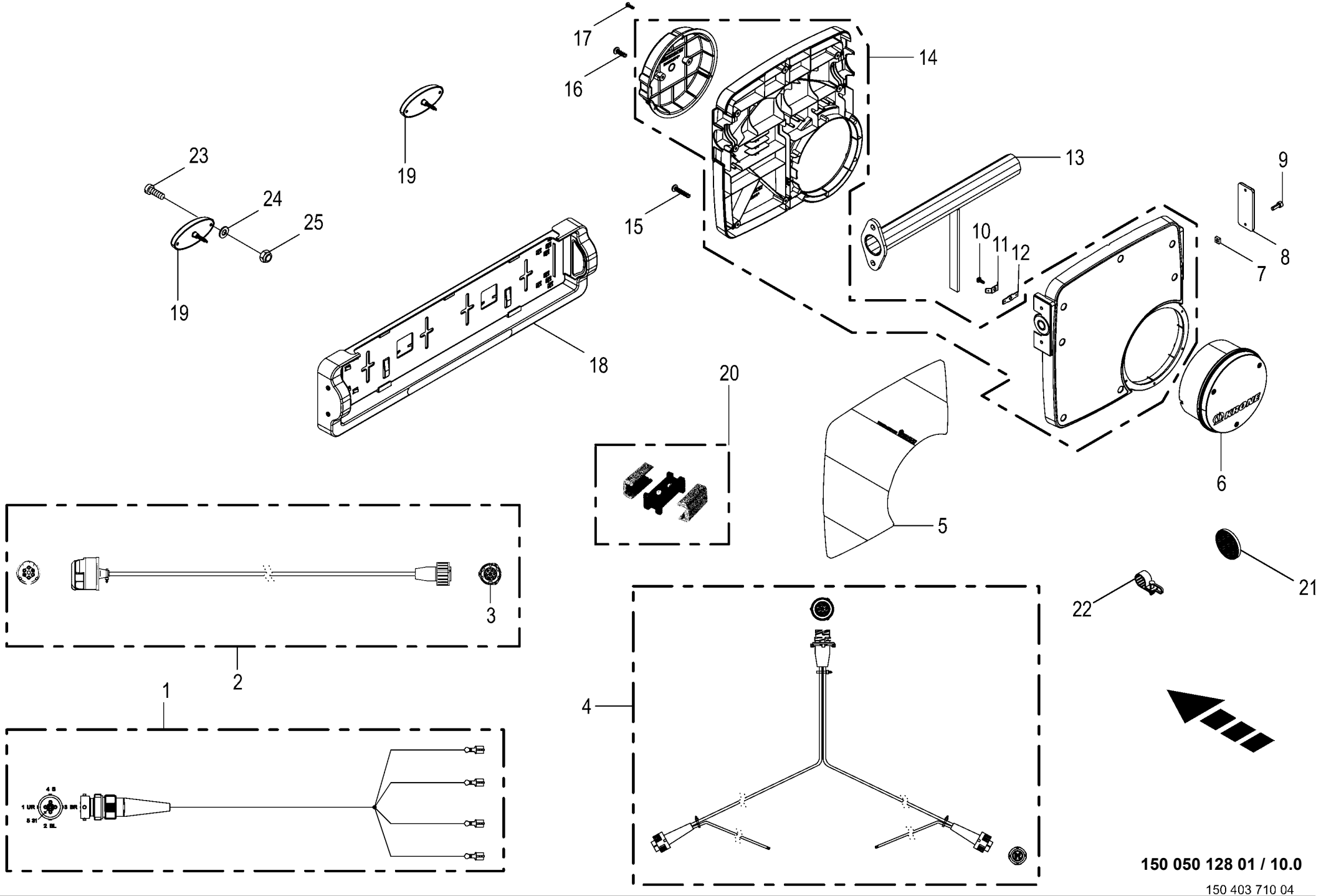


**150 050 128 01 / 10.0**

150 403 710 04

| **Beleuchtung**<br>**Lighting**<br>**Éclairage** | | | | | 951001 - 1030999 | X-DISC | | | | | | **150 050 128 01**<br>150 403 710 4 **10.0** |
|---|---|---|---|---|---|---|---|---|---|---|---|---|
| Pos. | ID-Nr. | Benennung | Description | Description | Masch.-Nr- | | | | | | | Bemerkung/Remarks/Remarque |
| 1 | 20 086 114 0 | Adapter 5-p - 4-p FlachstH | Adapter 5-p - 4-p FlachstH | Adaptateur 5-p - 4-p FlachstH | | 1 | | | | | | |
| 2 | 20 086 412 0 | Adapter 7-p Typ 12N - 7-p Baj. Verb. | Adapter 7-p Typ 12N - 7-p Baj. Verb. | Adaptateur 7-p Typ 12N - 7-p Baj. Verb. | | 1 | | | | | | |
| 3 | 00 303 426 0 | AMP-Rundstecker | AMP-circular plug | AMP prise circulaire | | x | | | | | | |
| 4 | 20 086 415 0 | Kabelb.7-p Baj. a. zwei 5-p. Baj.+Flachb. | CH 7-p baj on 2 5-p baj. + flat bolt | Faisceau de câbles 7-p + boulon plat | | 2 | | | | | | |
| 5 | 27 016 424 1 | Aufkleber Warnfolie re vollrefl. Typ III | Label Warnfolie re vollrefl. Typ III | Autocollant | | 1 | | | | | | |
| | 27 016 423 1 | Aufkleber Warnfolie li vollrefl. Typ III | Label Warnfolie li vollrefl. Typ III | Autocollant Gauche | | 1 | | | | | | |
| 6 | 20 084 448 0 | Leuchte S/B/BL Hybrid 4-p Fl. H KPL 12V | Lamp S/B/BL Hybrid 4-p Fl.H KPL 1 anb. | Voyant S/B/BL Hybrid 4-p Fl.H KPL 1 anb. | | 2 | | | | | | |
| | 20 087 420 0 | Lichtscheibe S/B/BL Ø 175 mm* 76,6 mm | Light lens S/B/BL Ø 175 mm* 76.6 mm | Verrine S/B/BL Ø 175 mm* 76,6 mm | | 2 | | | | | | |
| | 20 084 882 0 | LED Modul 12V 2,45W/0,25W Modul | LED Module 12V 2,45W/0,25W Modul | DEL Module 12V 2,45W/0,25W Module | | 2 | | | | | | |
| | 00 924 693 0 | Einfadenlampe | Singel filament buld | Lampe à l filament | | 2 | | | | | | 12 V / 21 W |
| 7 | 90 003 278 0 | Mutter 4-kt M4 Zn8 | Nut square M4 Zn8 | Écrou 4 pans M4 Zn8 | | x | | | | | | |
| 8 | 20 085 863 0 | Reflektor eckig gelb 95x38mm | Reflector Angular Yellow 95x38mm | Réflecteur Angulaire Jaune 95x38mm | | 2 | | | | | | |
| 9 | 90 003 366 0 | Zylinderschr. Torx M4 x 16 Zn8 | Cylinder screw Torx M4 x 16 Zn8 | Vis cylindrique Torx M4 x 16 Zn8 | | x | | | | | | |
| 10 | 90 003 119 0 | Linsenkopf-Schr.-Torx 3,0x6 verzinkt | Oval-head screw Torx 3,0x6 verzinkt | Vis à tête cylind bombée Torx 3,0x6 | | x | | | | | | |
| 11 | 20 084 247 0 | Adapterstecker Steckzungen abgew. | Adapter plug Steckzungen abgew. | Fiche adaptateur Steckzungen abgew. | | 4 | | | | | | |
| 12 | 20 084 246 0 | Adapterstecker Steckzungen gerade | Adapterp plug straight latch plates | Fiche adaptateur languettes droite | | 8 | | | | | | |
| 13 | 20 039 714 0 | Halterohr | Support tube | Tube de support | | 2 | | | | | | |
| 14 | 20 083 976 0 | Gehäuse Satz Beleuchtung | Housing kit lighting | Kit carter d'éclairage | | 2 | | | | | | |
| 15 | 90 003 122 0 | Linsenkopf-Schr.-Torx 5,0x25 verzinkt | Oval-head screw Torx 5,0x25 verzinkt | Vis à tête cylind bombée Torx 5,0x25 | | x | | | | | | |
| 16 | 90 003 121 0 | Linsenkopf-Schr.-Torx 5,0x16 verzinkt | Oval-head screw Torx 5.0 x 16 galvanised | Vis à tête bombée Torx 5,0x16 zinguée | | x | | | | | | |
| 17 | 90 003 120 0 | Linsenkopf-Schr.-Torx 4,0x12 verzinkt | Oval-head screw Torx 4,0x12 verzinkt | Vis à tête cylind bombée Torx 4,0x12 | | x | | | | | | |
| 18 | 20 082 609 0 | Leuchte K LED 2-p 12V/24V | Light K LED 2-p 12V/24V | Voyant K DEL 2-p 12V/24V | | 1 | | | | | | |
| 19 | 27 007 902 0 | Positionsleuchte | Position light | Feu de position | | 2 | | | | | | Lg.= 1000 |
| 20 | 20 089 458 0 | Mehrfachverteiler P2G | Multi-port distributor P2G | Multiprise P2G | | 3 | | | | | | |

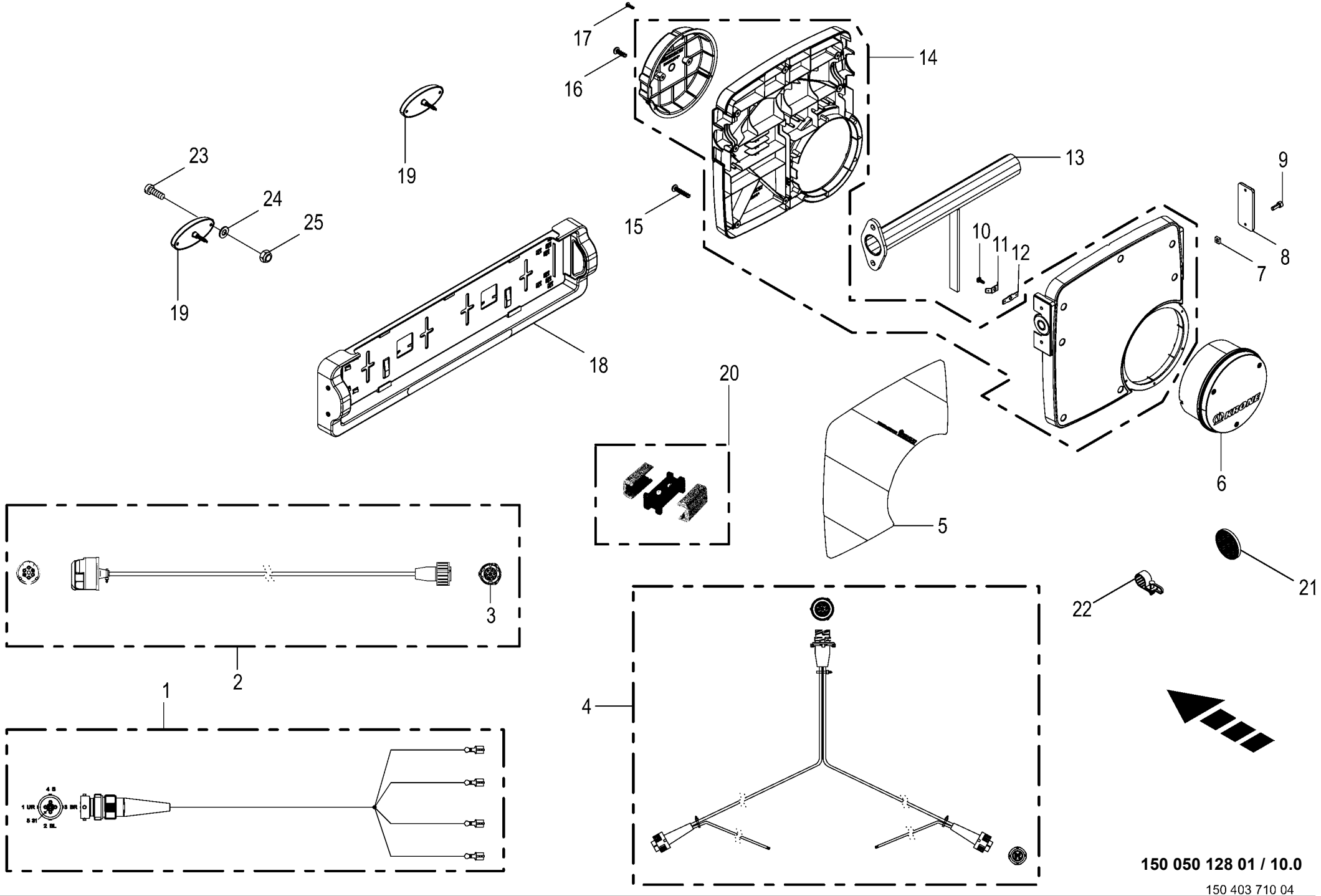


**150 050 128 01 / 10.0**

150 403 710 04

| **Beleuchtung**<br>**Lighting**<br>**Éclairage** | | | | | 951001 - 1030999 | X-DISC | | | | | | **150 050 128 01**<br>150 403 710 4 **10.0** |
|---|---|---|---|---|---|---|---|---|---|---|---|---|
| Pos. | ID-Nr. | Benennung | Description | Description | Masch.-Nr- | | | | | | | Bemerkung/Remarks/Remarque |
| 21 | 00 924 634 0 | Begrenzungsstrahler -gelb - selbstklebend | Side light -yellow -self- adhesive | Feu d'encombrement -jaune - autoadhésif | | 9 | | | | | | Rd. 62 |
| 22 | 00 924 068 0 | Schraublose Wellrohr-Schelle | Screwless corrugatend tube | Tube en tôle ondulée - collier de serrage sans visses | | 4 | | | | | | Rd. 9,5 |
| 23 | 00 903 407 0 | Zylinderschr. Schlitz M4 x 22/ 22 Zn8 | Cylinder screw slotted M4 x 22 Zn8 | Vis cylindrique à fente M4 x 22 Zn8 | | x | | | | | | |
| 24 | 00 910 325 0 | Scheibe | Washer | Rondelle | | x | | | | | | 4,3 X 9 X 0,8 |
| 25 | 00 908 718 0 | Sicherungsmutter | Locknut | Écrou hex | | x | | | | | | M 4 |
| | | | | | | | | | | | | |
| | | | | | | | | | | | | |
| | | | | | | | | | | | | |
| | | | | | | | | | | | | |
| | | | | | | | | | | | | |
| | | | | | | | | | | | | |
| | | | | | | | | | | | | |
| | | | | | | | | | | | | |

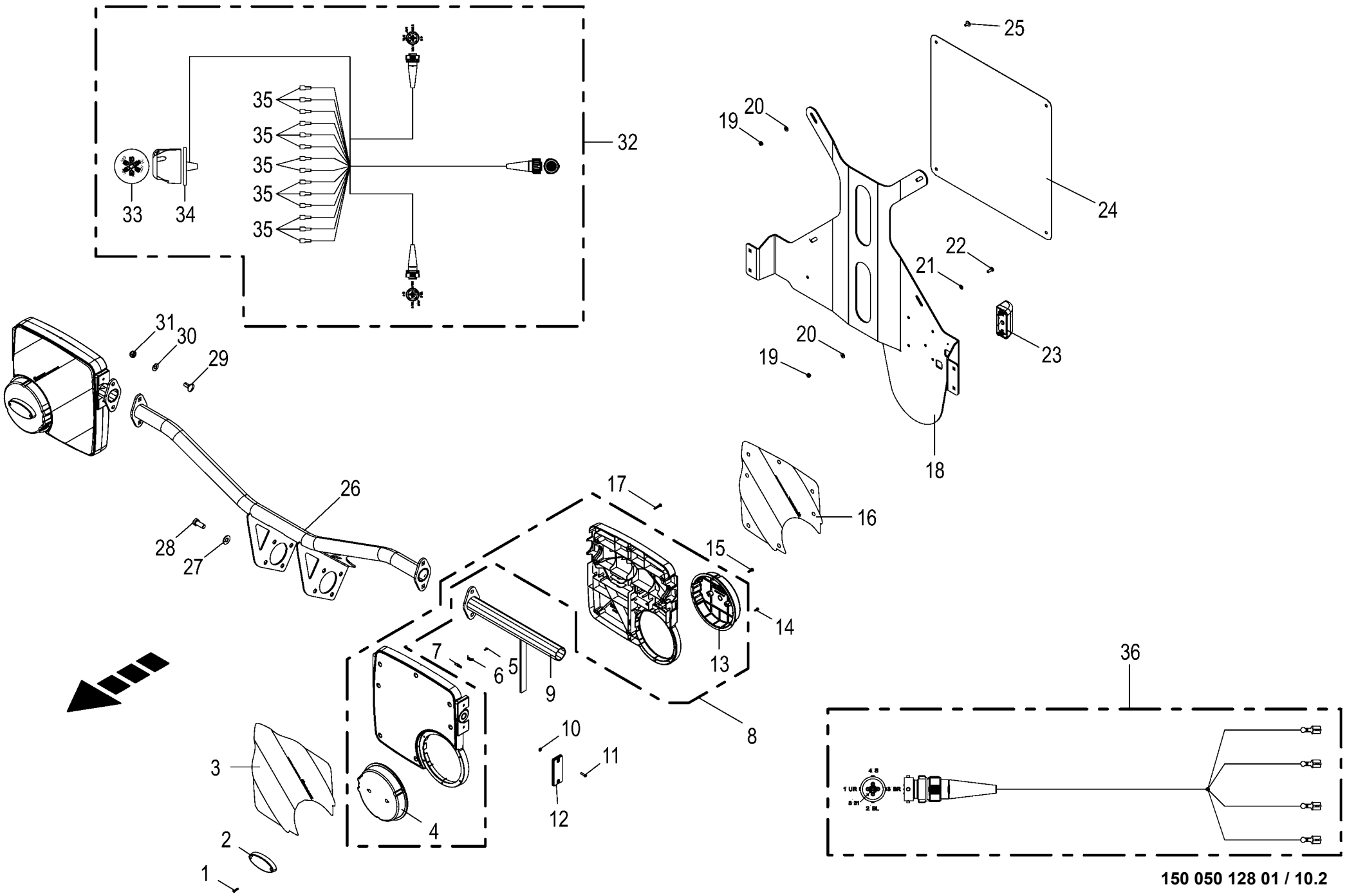


**150 050 128 01 / 10.2**

150 514 255 01

| **Beleuchtung -Italien**<br>**Lighting**<br>**Éclairage** | | | | | 1001000 - 1030999 | X-DISC | | | | | | **150 050 128 01**<br>150 514 255 1 **10.2** |
|---|---|---|---|---|---|---|---|---|---|---|---|---|
| Pos. | ID-Nr. | Benennung | Description | Description | Masch.-Nr- | | | | | | | Bemerkung/Remarks/Remarque |
| 1 | 90 003 330 0 | Linsenkopf-Schr.-Torx 4,0x16 verzinkt | Oval-head screw Torx 4,0x16 verzinkt | Vis à tête cylind bombée Torx 4,0x16 | | x | | | | | | |
| 2 | 20 084 257 0 | Leuchte BGRZ LED 2-p Fl.H KPL 12V anb. | Lamp BGRZ LED 2-p Fl.H KPL 1 anb. | Voyant BGRZ LED 2-p Fl.H KPL 1 anb. | | 2 | | | | | | |
| 3 | 27 016 423 1 | Aufkleber Warnfolie li vollrefl. Typ III -links | Label Warnfolie li vollrefl. Typ III -left | Autocollant Gauche -gauche | | 1 | | | | | | |
| | 27 016 424 1 | Aufkleber Warnfolie re vollrefl. Typ III -rechts | Label Warnfolie re vollrefl. Typ III -right | Autocollant -droite | | 1 | | | | | | |
| 4 | 20 083 975 0 | Deckel VKM15U 180x180x31mm | Cover VKM15U 180x180x31mm | Couvercle VKM15U 180x180x31mm | | 2 | | | | | | |
| 5 | 90 003 119 0 | Linsenkopf-Schr.-Torx 3,0x6 verzinkt | Oval-head screw Torx 3,0x6 verzinkt | Vis à tête cylind bombée Torx 3,0x6 | | x | | | | | | |
| 6 | 20 084 247 0 | Adapterstecker Steckzungen abgew. | Adapter plug Steckzungen abgew. | Fiche adaptateur Steckzungen abgew. | | 4 | | | | | | |
| 7 | 20 084 246 0 | Adapterstecker Steckzungen gerade | Adapterp plug straight latch plates | Fiche adaptateur languettes droite | | 8 | | | | | | |
| 8 | 20 083 976 0 | Gehäuse Satz Beleuchtung | Housing kit lighting | Kit carter d'éclairage | | 2 | | | | | | |
| 9 | 20 039 714 0 | Halterohr | Support tube | Tube de support | | 2 | | | | | | |
| 10 | 90 003 278 0 | Mutter 4-kt M4 Zn8 | Nut square M4 Zn8 | Écrou 4 pans M4 Zn8 | | x | | | | | | |
| 11 | 90 003 366 0 | Zylinderschr. Torx M4 x 16 Zn8 | Cylinder screw Torx M4 x 16 Zn8 | Vis cylindrique Torx M4 x 16 Zn8 | | x | | | | | | |
| 12 | 20 085 863 0 | Reflektor eckig gelb 95x38mm | Reflector Angular Yellow 95x38mm | Réflecteur Angulaire Jaune 95x38mm | | 2 | | | | | | |
| 13 | 20 083 975 0 | Deckel VKM15U 180x180x31mm | Cover VKM15U 180x180x31mm | Couvercle VKM15U 180x180x31mm | | 2 | | | | | | |
| 14 | 90 003 120 0 | Linsenkopf-Schr.-Torx 4,0x12 verzinkt | Oval-head screw Torx 4,0x12 verzinkt | Vis à tête cylind bombée Torx 4,0x12 | | x | | | | | | |
| 15 | 90 003 121 0 | Linsenkopf-Schr.-Torx 5,0x16 verzinkt | Oval-head screw Torx 5.0 x 16 galvanised | Vis à tête bombée Torx 5,0x16 zinguée | | x | | | | | | |
| | 27 016 765 1 | Aufkleber Warnfolie li vollrefl. Typ III -links | Label Warnfolie li vollrefl. Typ III -left | Autocollant -gauche | | 1 | | | | | | |
| 16 | 27 016 766 1 | Aufkleber Warnfolie re vollrefl. Typ III -rechts | Label Warnfolie re vollrefl. Typ III -right | Autocollant -droite | | 1 | | | | | | |
| 17 | 90 003 122 0 | Linsenkopf-Schr.-Torx 5,0x25 verzinkt | Oval-head screw Torx 5,0x25 verzinkt | Vis à tête cylind bombée Torx 5,0x25 | | x | | | | | | |
| 18 | 20 296 724 0 | Nummernschild- / Warntafelbl. Italien | Licence plate/warning panel plate Italy | Tôle de plaque d'immatr./ panneau d'aver. | | 1 | | | | | | |
| 19 | 00 908 704 1 | Sicherungsmutter | Locknut | Écrou hex | | x | | | | | | M 6 |
| 20 | 00 909 906 1 | Sperrkantscheibe | Detent edged washer | Disque à bord d'arrêt | | x | | | | | | SKM 6 |

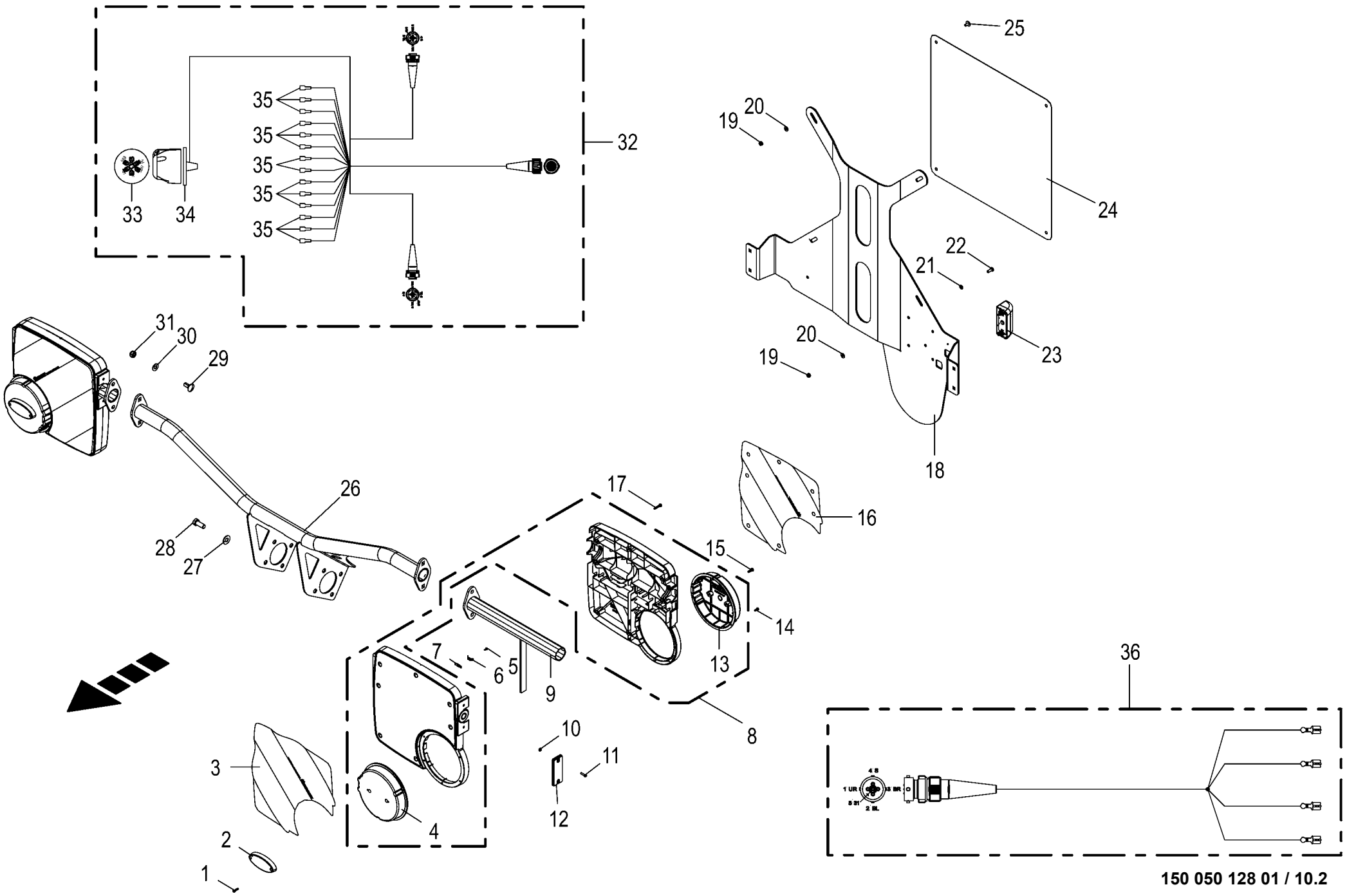


**150 050 128 01 / 10.2**

150 514 255 01

| **Beleuchtung -Italien**<br>**Lighting**<br>**Éclairage** | | | | | 1001000 - 1030999 | X - DISC | | | | | | **150 050 128 01**<br>150 514 255 1 **10.2** |
|---|---|---|---|---|---|---|---|---|---|---|---|---|
| Pos. | ID-Nr. | Benennung | Description | Description | Masch.-Nr- | | | | | | | Bemerkung/Remarks/Remarque |
| 21 | 00 910 411 1 | Scheibe | Washer | Rondelle | | x | | | | | | 6,4 X 12,5 X 1,6 |
| 22 | 00 900 607 0 | 6kt-Schraube | Hex head bolt | Boulon tête hex | | x | | | | | | M 6 X 16 |
| 23 | 20 086 211 0 | Leuchte K LED 2-p KPL 12V/24V anb. | Lamp K LED 2-p KPL 3 anb. | Voyant K LED 2-p KPL 3 anb. | | 1 | | | | | | |
| 24 | 27 012 182 0 | Warntafel | Warning panel | Panneau d´avertissement | | 1 | | | | | | |
| 25 | 00 905 000 2 | Flachrundschraube | Coach bolt | Vis a tête bombée | | x | | | | | | M 6 X 12 |
| 26 | 20 296 726 0 | Rohrbügel vorne Italien | Tubular bar front Italy | Étrier tubulaire avant Italie | | 1 | | | | | | |
| 27 | 00 909 910 1 | Sperrkantscheibe | Detent edged washer | Disque à bord d'arrêt | | x | | | | | | SKM 12 |
| 28 | 00 900 656 0 | 6kt-Schraube | Hex head bolt | Boulon tête hex | | x | | | | | | M 12 X 30 |
| 29 | 00 904 850 1 | Flachrundschraube | Coach bolt | Vis a tête bombée | | x | | | | | | M 10 X 25 |
| 30 | 00 909 909 1 | Sperrkantscheibe | Detent edged washer | Disque à bord d'arrêt | | x | | | | | | SKM 10 |
| 31 | 00 908 758 0 | Sicherungsmutter | Locknut | Écrou hex | | x | | | | | | M 10 |
| 32 | 20 086 413 1 | Kabelb. 7-p Typ 12N auf 7-p und zwei 5-p | | Fdc à 7p type 12N à 7p et deux 5p | | 1 | | | | | | |
| 33 | 00 924 571 0 | Steckdose -7-polig | Socket -7-pole | Prise de courant -7-pôle | | x | | | | | | |
| 34 | 00 924 517 0 | Steckdosenuntersatz | Socket base | Base de prise de courant | | x | | | | | | |
| 35 | 00 302 688 0 | Flachsteckhülse -rot | Flat sleeve -red | Douille plate -rouge | | x | | | | | | 6,3 X 0,8 |
| 36 | 20 086 114 0 | Adapter 5-p - 4-p FlachstH | Adapter 5-p - 4-p FlachstH | Adaptateur 5-p - 4-p FlachstH | | 2 | | | | | | |
| | | | | | | | | | | | | |
| | | | | | | | | | | | | |
| | | | | | | | | | | | | |
| | | | | | | | | | | | | |
| | | | | | | | | | | | | |

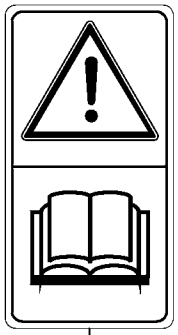

1

2

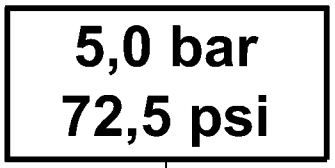


3

4

5

6

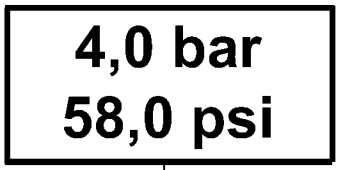


7

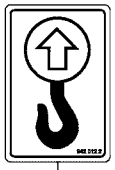

8

9

| **Aufkleber**<br>**Label**<br>**Autocollant** | | | | | 951001 - 1030999 | X-DISC | | | | | | **150 050 128 01**<br>150 325 166 5 **11.0** |
|---|---|---|---|---|---|---|---|---|---|---|---|---|
| Pos. | ID-Nr. | Benennung | Description | Description | Masch.-Nr- | | | | | | | Bemerkung/Remarks/Remarque |
| 1 | 00 939 471 1 | Aufkleber | Label | Autocollant | | 2 | | | | | | |
| 2 | 00 942 196 1 | Aufkleber | Label | Autocollant | | 2 | | | | | | |
| 3 | 00 000 001 0 | -nicht für diese Maschine | -not for this machine | -non prevu pour cette machine | | x | | | | | | |
| 4 | 00 939 145 1 | Aufkleber | Label | Autocollant | | 1 | | | | | | 40 |
| 5 | 27 021 260 0 | Aufkleber Fettpresse blau | Label Fettpresse blue | Autocollant Fettpresse bleu | | 2 | | | | | | |
| 6 | 00 942 341 1 | Aufkleber -beige | Tag -beige | Autocollant -beige | | 2 | | | | | | Lg.= 893 |
| 7 | 00 441 073 2 | Aufkleber | Label | Autocollant | | 4 | | | | | | 4,0 Bar |
| 8 | 00 942 012 2 | Aufkleber Kranhaken einhängen | Label | Autocollant | | 3 | | | | | | |
| 9 | 27 023 958 0 | blau<br>Aufkleber Zurrpunkte blau | Label | Autocollant | | 4 | | | | | | |
| | | | | | | | | | | | | |
| | | | | | | | | | | | | |
| | | | | | | | | | | | | |
| | | | | | | | | | | | | |
| | | | | | | | | | | | | |
| | | | | | | | | | | | | |
| | | | | | | | | | | | | |

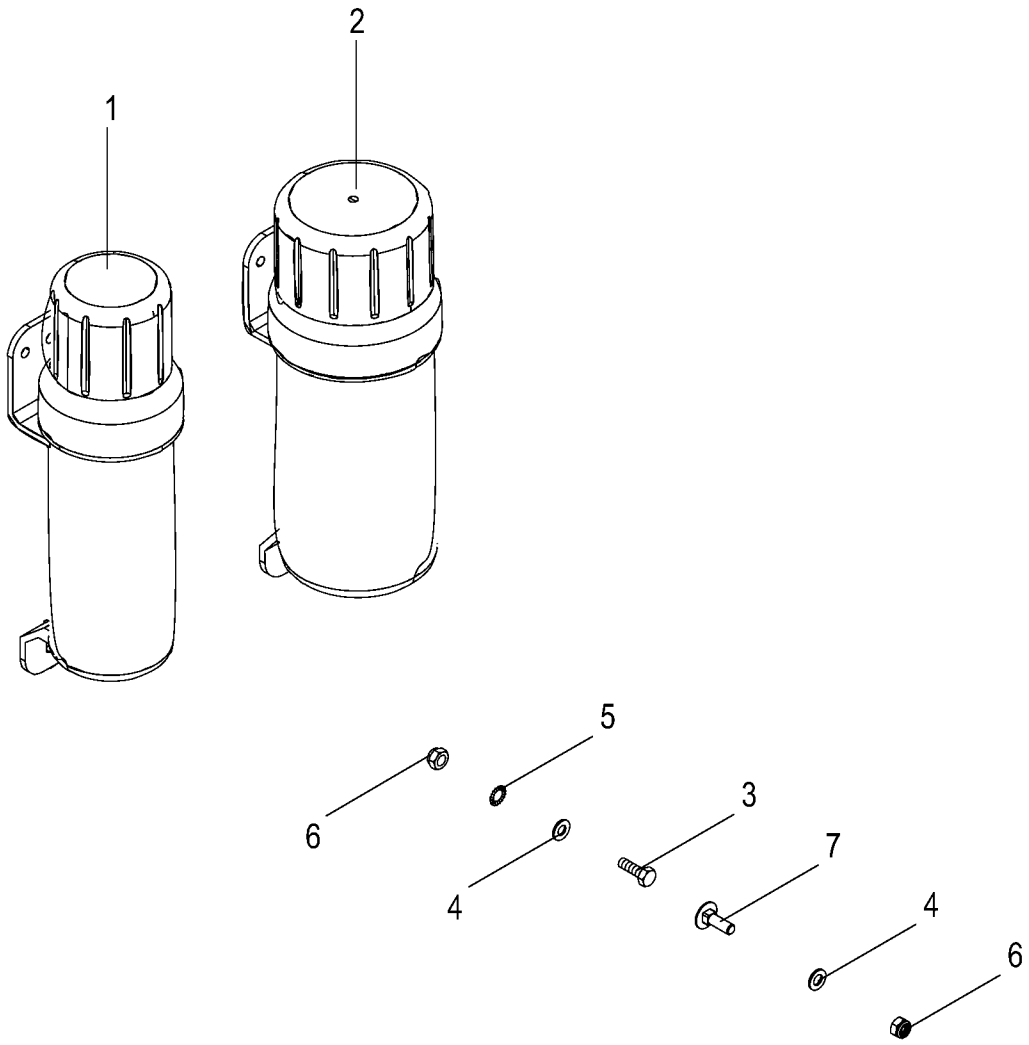
1
2
5
6
3
4
7
4
6

## Dokumentenbehälter
## Document box
## Boîte à documents

951001 - 1030999

X-DISC

**150 050 128 01**

150 491 752 2 **12.0**

| Pos. | ID-Nr. | Benennung | Description | Description | Masch.-Nr- | | | | | | | Bemerkung/Remarks/Remarque |
|---|---|---|---|---|---|---|---|---|---|---|---|---|
| 1 | 27 021 829 0 | Betriebsanltg-Box klein 318 x Ø84 mm | Op. instructions box small 318 x Ø84 mm | Boîte notice d'util. petite 318 x Ø84 mm | | 1 | | | | | | |
| 2 | 27 021 830 0 | Betriebsanltg-Box gross 319 x Ø109 mm | Operating instr. box large 318 x Ø84 mm | Boîte notice d'util. large 319 x Ø109 mm | | 1 | | | | | | |
| 3 | 00 900 616 0 | 6kt-Schraube | Hex head bolt | Boulon tête hex | | x | | | | | | M 8 X 25 |
| | 00 900 617 0 | 6kt-Schraube | Hex head bolt | Boulon tête hex | | x | | | | | | M 8 X 30 |
| 4 | 00 910 413 0 | Scheibe | Washer | Rondelle | | x | | | | | | 8,4 X 17 X 1,6 |
| 5 | 00 909 908 1 | Sperrkantscheibe | Detent edged washer | Disque à bord d'arrêt | | x | | | | | | SKM 8 |
| 6 | 00 908 706 0 | Sicherungsmutter | Locknut | Écrou hex | | x | | | | | | M 8 |
| 7 | 00 904 732 2 | Flachrundschraube | Coach bolt | Vis a tête bombée | | x | | | | | | M 8 X 25 |
| | | | | | | | | | | | | |
| | | | | | | | | | | | | |
| | | | | | | | | | | | | |
| | | | | | | | | | | | | |
| | | | | | | | | | | | | |
| | | | | | | | | | | | | |
| | | | | | | | | | | | | |

| ID-NR. ID-NO. | TAFEL DIAG. | POS. POS. | ID-NR. ID-NO. | TAFEL DIAG. | POS. POS. | ID-NR. ID-NO. | TAFEL DIAG. | POS. POS. | ID-NR. ID-NO. | TAFEL DIAG. | POS. POS. | ID-NR. ID-NO. | TAFEL DIAG. | POS. POS. |
|---|---|---|---|---|---|---|---|---|---|---|---|---|---|---|
| 00 000 001 0 | 11.0 | 3 | 00 901 004 0 | 9.0 | 14 | 00 908 706 0 | 12.0 | 6 | 00 910 506 1 | 7.0 | 6 | 00 942 012 2 | 11.0 | 8 |
| 00 015 145 1 | 7.0 | 7 | 00 901 042 1 | 1.0 | 11 | 00 908 718 0 | 10.0 | 25 | 00 910 512 2 | 8.0 | 8 | 00 942 196 1 | 11.0 | 2 |
| 00 015 213 5 | 8.0 | 19 | 00 901 097 1 | 1.0 | 2 | 00 908 719 0 | 2.0 | 9 | 00 910 515 2 | 1.0 | 32 | 00 942 341 1 | 11.0 | 6 |
| 00 146 983 1 | 8.0 | 12 | 00 901 112 1 | 1.0 | 35 | 00 908 719 0 | 3.0 | 4 | 00 910 603 0 | 9.0 | 8 | 00 950 284 1 | 4.0 | 1 |
| 00 233 572 0 | 6.0 | 13 | 00 901 115 0 | 1.0 | 28 | 00 908 719 0 | 8.0 | 4 | 00 910 639 1 | 6.0 | 6 | 00 950 622 0 | 3.0 | 1 |
| 00 233 573 0 | 6.0 | 4 | 00 901 140 2 | 8.0 | 9 | 00 908 758 0 | 1.0 | 15 | 00 910 639 1 | 9.0 | 4 | 00 950 804 0 | 1.0 | 1 |
| 00 275 416 1 | 1.0 | 6 | 00 901 423 0 | 8.0 | 26 | 00 908 758 0 | 6.0 | 14 | 00 912 066 0 | 1.0 | 37 | 00 952 004 0 | 1.0 | 23 |
| 00 287 855 0 | 8.0 | 14 | 00 901 436 0 | 1.0 | 13 | 00 908 758 0 | 9.0 | 18 | 00 912 091 1 | 3.0 | 28 | 00 952 005 0 | 1.0 | 25 |
| 00 302 688 0 | 10.2 | 35 | 00 901 436 0 | 4.0 | 29 | 00 908 758 0 | 10.2 | 31 | 00 912 091 1 | 4.0 | 2 | 00 952 151 0 | 1.0 | 41 |
| 00 303 426 0 | 10.0 | 3 | 00 901 453 0 | 1.0 | 40 | 00 908 831 1 | 4.0 | 3 | 00 912 132 0 | 1.0 | 33 | 00 952 311 0 | 4.0 | 34 |
| 00 340 988 1 | 1.0 | 7 | 00 901 460 0 | 1.0 | 19 | 00 908 931 1 | 3.0 | 27 | 00 912 531 0 | 1.0 | 24 | 00 952 333 1 | 3.0 | 20 |
| 00 353 236 0 | 6.0 | 11 | 00 901 482 0 | 2.0 | 11 | 00 909 903 0 | 6.0 | 24 | 00 912 584 2 | 8.0 | 15 | 00 952 382 0 | 4.0 | 25 |
| 00 353 257 0 | 7.0 | 4 | 00 903 077 1 | 6.0 | 23 | 00 909 906 1 | 10.2 | 20 | 00 912 644 2 | 8.0 | 7 | 00 952 415 1 | 4.0 | 10 |
| 00 353 260 0 | 2.0 | 5 | 00 903 407 0 | 10.0 | 23 | 00 909 908 1 | 6.0 | 20 | 00 916 009 0 | 1.0 | 45 | 00 952 421 0 | 3.0 | 25 |
| 00 353 284 0 | 2.0 | 3 | 00 904 723 0 | 8.0 | 2 | 00 909 908 1 | 8.0 | 27 | 00 916 019 0 | 8.0 | 17 | 00 952 421 0 | 4.0 | 6 |
| 00 354 505 0 | 8.0 | 1 | 00 904 731 2 | 9.0 | 12 | 00 909 908 1 | 9.0 | 9 | 00 916 025 0 | 1.0 | 36 | 00 952 422 0 | 4.0 | 22 |
| 00 354 523 0 | 7.0 | 10 | 00 904 732 2 | 6.0 | 19 | 00 909 908 1 | 12.0 | 5 | 00 916 034 0 | 1.0 | 49 | 00 952 610 0 | 4.0 | 5 |
| 00 354 527 0 | 8.0 | 5 | 00 904 732 2 | 12.0 | 7 | 00 909 909 1 | 6.0 | 15 | 00 917 103 0 | 8.0 | 21 | 00 952 816 0 | 3.0 | 8 |
| 00 354 535 1 | 8.0 | 16 | 00 904 850 1 | 6.0 | 16 | 00 909 909 1 | 9.0 | 19 | 00 917 506 0 | 1.0 | 8 | 00 952 816 0 | 4.0 | 11 |
| 00 354 540 0 | 2.0 | 6 | 00 904 850 1 | 10.2 | 29 | 00 909 909 1 | 10.2 | 30 | 00 917 603 1 | 1.0 | 9 | 00 952 819 0 | 3.0 | 6 |
| 00 354 542 0 | 8.0 | 18 | 00 904 951 2 | 9.0 | 7 | 00 909 910 1 | 6.0 | 3 | 00 917 901 1 | 1.0 | 10 | 00 952 819 0 | 4.0 | 24 |
| 00 354 548 0 | 8.0 | 29 | 00 904 983 1 | 7.0 | 13 | 00 909 910 1 | 7.0 | 12 | 00 919 105 0 | 2.0 | 13 | 00 952 820 0 | 3.0 | 7 |
| 00 354 559 0 | 8.0 | 25 | 00 905 000 2 | 10.2 | 25 | 00 909 910 1 | 10.2 | 27 | 00 919 108 0 | 4.0 | 33 | 00 952 820 0 | 4.0 | 23 |
| 00 354 560 0 | 7.0 | 5 | 00 908 212 0 | 4.0 | 31 | 00 909 912 1 | 2.0 | 8 | 00 922 651 2 | 8.0 | 20 | 00 952 821 0 | 3.0 | 16 |
| 00 354 562 0 | 8.0 | 6 | 00 908 215 0 | 1.0 | 21 | 00 909 912 1 | 3.0 | 3 | 00 924 068 0 | 10.0 | 22 | 00 952 821 0 | 4.0 | 14 |
| 00 441 073 2 | 11.0 | 7 | 00 908 215 0 | 7.0 | 3 | 00 909 912 1 | 8.0 | 3 | 00 924 517 0 | 10.2 | 34 | 00 952 822 0 | 3.0 | 17 |
| 00 441 190 1 | 2.0 | 4 | 00 908 218 0 | 1.0 | 30 | 00 910 215 0 | 3.0 | 24 | 00 924 571 0 | 10.2 | 33 | 00 952 822 0 | 4.0 | 13 |
| 00 900 304 1 | 1.0 | 22 | 00 908 225 0 | 8.0 | 31 | 00 910 215 0 | 4.0 | 7 | 00 924 634 0 | 10.0 | 21 | 00 952 823 0 | 3.0 | 14 |
| 00 900 607 0 | 10.2 | 22 | 00 908 701 0 | 1.0 | 3 | 00 910 250 1 | 4.0 | 8 | 00 924 693 0 | 10.0 | 6 | 00 952 823 0 | 4.0 | 17 |
| 00 900 616 0 | 12.0 | 3 | 00 908 701 0 | 1.0 | 43 | 00 910 256 0 | 3.0 | 23 | 00 927 101 1 | 7.0 | 9 | 00 952 824 0 | 3.0 | 9 |
| 00 900 617 0 | 12.0 | 3 | 00 908 701 0 | 6.0 | 12 | 00 910 303 1 | 8.0 | 10 | 00 932 105 0 | 3.0 | 26 | 00 952 824 0 | 4.0 | 15 |
| 00 900 637 0 | 6.0 | 5 | 00 908 701 0 | 6.0 | 27 | 00 910 320 0 | 6.0 | 26 | 00 932 108 0 | 3.0 | 21 | 00 952 825 0 | 3.0 | 19 |
| 00 900 637 0 | 9.0 | 20 | 00 908 701 0 | 7.0 | 11 | 00 910 325 0 | 10.0 | 24 | 00 932 152 0 | 4.0 | 4 | 00 952 825 0 | 4.0 | 21 |
| 00 900 638 0 | 9.0 | 2 | 00 908 704 1 | 8.0 | 34 | 00 910 361 1 | 9.0 | 3 | 00 932 180 0 | 4.0 | 9 | 00 952 826 0 | 3.0 | 12 |
| 00 900 656 0 | 10.2 | 28 | 00 908 704 1 | 9.0 | 15 | 00 910 411 1 | 10.2 | 21 | 00 935 338 0 | 2.0 | 2 | 00 952 826 0 | 4.0 | 18 |
| 00 900 662 0 | 3.0 | 15 | 00 908 704 1 | 10.2 | 19 | 00 910 413 0 | 12.0 | 4 | 00 938 834 0 | 3.0 | 29 | 00 952 827 0 | 3.0 | 10 |
| 00 900 675 0 | 2.0 | 7 | 00 908 706 0 | 1.0 | 12 | 00 910 414 0 | 1.0 | 14 | 00 939 145 1 | 11.0 | 4 | 00 952 827 0 | 4.0 | 12 |
| 00 900 677 0 | 2.0 | 10 | 00 908 706 0 | 6.0 | 21 | 00 910 414 0 | 4.0 | 30 | 00 939 471 1 | 11.0 | 1 | 00 952 828 0 | 4.0 | 16 |
| 00 900 677 0 | 3.0 | 2 | 00 908 706 0 | 8.0 | 28 | 00 910 414 0 | 6.0 | 7 | 00 940 006 0 | 6.0 | 17 | 00 952 829 0 | 4.0 | 26 |
| 00 901 004 0 | 8.0 | 33 | 00 908 706 0 | 9.0 | 10 | 00 910 506 1 | 1.0 | 20 | 00 940 007 0 | 6.0 | 18 | 00 952 830 0 | 3.0 | 11 |

| ID-NR. ID-NO. | TAFEL DIAG. | POS. POS. | ID-NR. ID-NO. | TAFEL DIAG. | POS. POS. | ID-NR. ID-NO. | TAFEL DIAG. | POS. POS. | ID-NR. ID-NO. | TAFEL DIAG. | POS. POS. | ID-NR. ID-NO. | TAFEL DIAG. | POS. POS. |
|---|---|---|---|---|---|---|---|---|---|---|---|---|---|---|
| 00 952 830 0 | 4.0 | 20 | 20 091 135 0 | 8.0 | 32 | 27 016 423 1 | 10.2 | 3 | | | | | | |
| 00 952 831 0 | 3.0 | 18 | 20 097 982 0 | 9.0 | 11 | 27 016 424 1 | 10.0 | 5 | | | | | | |
| 00 952 831 0 | 4.0 | 19 | 20 097 995 0 | 9.0 | 1 | 27 016 424 1 | 10.2 | 3 | | | | | | |
| 00 952 832 0 | 4.0 | 32 | 20 098 006 0 | 9.0 | 17 | 27 016 765 1 | 10.2 | 15 | | | | | | |
| 00 952 898 1 | 7.0 | 1 | 20 098 012 0 | 9.0 | 6 | 27 016 766 1 | 10.2 | 16 | | | | | | |
| 00 953 010 1 | 5.0 | 1 | 20 098 016 0 | 9.0 | 16 | 27 021 260 0 | 11.0 | 5 | | | | | | |
| 00 953 118 0 | 5.0 | 1 | 20 098 020 0 | 9.0 | 13 | 27 021 829 0 | 12.0 | 1 | | | | | | |
| 00 953 210 0 | 5.0 | 1 | 20 291 806 0 | 6.0 | 22 | 27 021 830 0 | 12.0 | 2 | | | | | | |
| 00 953 398 0 | 5.0 | 1 | 20 292 836 0 | 6.0 | 1 | 27 023 958 0 | 11.0 | 9 | | | | | | |
| 00 953 606 0 | 1.0 | 46 | 20 292 847 0 | 6.0 | 9 | 90 000 121 0 | 6.0 | 25 | | | | | | |
| 00 953 823 0 | 2.0 | 12 | 20 292 848 0 | 6.0 | 9 | 90 000 446 0 | 6.0 | 2 | | | | | | |
| 00 953 941 0 | 7.0 | 2 | 20 293 570 1 | 2.0 | 1 | 90 001 230 0 | 6.0 | 8 | | | | | | |
| 00 956 695 0 | 4.0 | 28 | 20 296 724 0 | 10.2 | 18 | 90 001 230 0 | 9.0 | 5 | | | | | | |
| 00 956 696 0 | 4.0 | 27 | 20 296 726 0 | 10.2 | 26 | 90 001 712 0 | 6.0 | 10 | | | | | | |
| 20 039 714 0 | 10.0 | 13 | 27 000 970 0 | 1.0 | 26 | 90 003 119 0 | 10.0 | 10 | | | | | | |
| 20 039 714 0 | 10.2 | 9 | 27 001 406 0 | 1.0 | 34 | 90 003 119 0 | 10.2 | 5 | | | | | | |
| 20 082 609 0 | 10.0 | 18 | 27 001 410 0 | 1.0 | 39 | 90 003 120 0 | 10.0 | 17 | | | | | | |
| 20 083 975 0 | 10.2 | 4 | 27 001 411 0 | 1.0 | 44 | 90 003 120 0 | 10.2 | 14 | | | | | | |
| 20 083 975 0 | 10.2 | 13 | 27 001 412 0 | 1.0 | 47 | 90 003 121 0 | 10.0 | 16 | | | | | | |
| 20 083 976 0 | 10.0 | 14 | 27 001 413 0 | 1.0 | 48 | 90 003 121 0 | 10.2 | 15 | | | | | | |
| 20 083 976 0 | 10.2 | 8 | 27 001 414 0 | 1.0 | 18 | 90 003 122 0 | 10.0 | 15 | | | | | | |
| 20 084 246 0 | 10.0 | 12 | 27 001 415 0 | 1.0 | 38 | 90 003 122 0 | 10.2 | 17 | | | | | | |
| 20 084 246 0 | 10.2 | 7 | 27 001 416 0 | 1.0 | 42 | 90 003 278 0 | 10.0 | 7 | | | | | | |
| 20 084 247 0 | 10.0 | 11 | 27 001 417 0 | 1.0 | 16 | 90 003 278 0 | 10.2 | 10 | | | | | | |
| 20 084 247 0 | 10.2 | 6 | 27 001 418 0 | 1.0 | 27 | 90 003 330 0 | 10.2 | 1 | | | | | | |
| 20 084 257 0 | 10.2 | 2 | 27 001 419 0 | 1.0 | 29 | 90 003 366 0 | 10.0 | 9 | | | | | | |
| 20 084 448 0 | 10.0 | 6 | 27 001 420 0 | 1.0 | 4 | 90 003 366 0 | 10.2 | 11 | | | | | | |
| 20 084 882 0 | 10.0 | 6 | 27 001 421 0 | 1.0 | 5 | 90 003 896 0 | 8.0 | 30 | | | | | | |
| 20 085 863 0 | 10.0 | 8 | 27 001 422 0 | 1.0 | 17 | | | | | | | | | |
| 20 085 863 0 | 10.2 | 12 | 27 001 423 0 | 1.0 | 31 | | | | | | | | | |
| 20 086 114 0 | 10.0 | 1 | 27 001 424 0 | 1.0 | 50 | | | | | | | | | |
| 20 086 114 0 | 10.2 | 36 | 27 001 425 0 | 1.0 | 51 | | | | | | | | | |
| 20 086 211 0 | 10.2 | 23 | 27 001 501 0 | 3.0 | 13 | | | | | | | | | |
| 20 086 412 0 | 10.0 | 2 | 27 003 008 0 | 3.0 | 5 | | | | | | | | | |
| 20 086 413 1 | 10.2 | 32 | 27 003 015 0 | 3.0 | 22 | | | | | | | | | |
| 20 086 415 0 | 10.0 | 4 | 27 007 902 0 | 10.0 | 19 | | | | | | | | | |
| 20 087 420 0 | 10.0 | 6 | 27 012 182 0 | 10.2 | 24 | | | | | | | | | |
| 20 089 458 0 | 10.0 | 20 | 27 013 491 0 | 2.0 | 14 | | | | | | | | | |
| 20 091 129 0 | 8.0 | 11 | 27 015 591 0 | 7.0 | 8 | | | | | | | | | |
| 20 091 130 0 | 8.0 | 13 | 27 016 423 1 | 10.0 | 5 | | | | | | | | | |

**Verwenden Sie nur**

**Original-KRONE-Ersatzteile !**

**Das gibt Sicherheit und spart Kosten !**

Original-KRONE-Ersatzteile bieten die Garantie für höchste Verschleißfestigkeit , lange Lebensdauer und preiswerten Einkauf !

Sie bekommen bei Krone nur Materialien in einwandfreier Qualität und absolut passend für Ihre KRONE-Maschinen. Bei Verwendung von Original-KRONE-Ersatzteilen entspricht das Gerät in Funktion und Arbeitweise wieder der ursprünglichen Ausführung !

Imitationen und Kopien von Teilen, speziell auf dem Sektor Verschleißteile halten nicht das, was sie vom Aussehen vielleicht versprechen. Material-Qualität kann man schlecht optisch prüfen - daher größte Vorsicht bei Billigangeboten !

**Darum lieber gleich**

**Original-KRONE-Ersatzteile !**

**Ersatzteil-Katalog auch auf CD-ROM erhältlich !**

**Use**

**KRONE original spare parts only !**

**This will increase operational reliability and help to save costs !**

KRONE original spare parts give you the guarantee of maximum resistance to wear, long lifetime and low prices !

KRONE provides you with parts of first-rate quality which are perfectly suitable for your KRONE machine. By using KRONE original spare parts you can be sure that function and mode of operation are again as satisfactory as a new machine !

Imitations and copies of parts, in particular wear parts, are not as reliable as they seem to be ! The quality of material can hardly be checked with the eye - it is therefore not advisable to purchase imitation parts even if they are cheaper !

**In any case it‘s better**

**to use Krone original spare parts**

**Spare parts list also available on CD-ROM !**

**N‘utiliser que**

**des pièces de rechange d‘origine KRONE !**

**Vous augmentez ainsi la sécurité de fonctionnement et vous réduisez considérablement vos coûts !**

Les pièces de rechange d‘origine KRONE vous donnent la sécurité d‘une exeptionnelle résistance à l‘usure, d‘une longue durée d‘utilisation et de prix avantageux.

KRONE vous offre uniquement des pièces de première qualité parfaitement adaptées à votre machine KRONE. En utilisant des pièces de rechange d‘origine KRONE vous pouvez être sûr que le fonctionnement et le mode de travail sont identiques à ceux d‘une nouvelle machine.

Les imitations et copies de pièces, tout particulièrement des pièces d‘usure, ne tiennent pas ce qu‘elles promettent par leur apparence ! En effet il n‘est guère possible de vérifier visuellement la qualité d‘une matière. Il est donc prudent de juger avec scepticisme les pièces de rechange à bas prix !

**De toute façon il est raisonnable de donner la préférence aux pièces de rechange d‘origine KRONE !**

**Catalogue de pièces de rechange également disponible sur CD-ROM !**

KRONE

. . . konsequent, kompetent


# Maschinenfabrik
# Bernard KRONE GmbH & Co. KG

Heinrich-Krone-Straße 10, D-48480 Spelle
Postfach 11 63, D-48478 Spelle

Phone +049 (0) 5977 /935-0
Fax +049 (0) 59 77/935-339 - Zentrale
Fax +049 (0) 5977 /935-239 - ET-Lager

Internet: http://www.krone.de
eMail: info.ldm@krone.de